AFLEX HOSE

BIOFLEX ULTRA

Smoothbore Flexible PTFE Hose

CHEMICAL RESISTANT

KINK RESISTANT

SELF CLEANING

FLEXIBLE

HYGIENIC

Contents

INTRODUCTION TO BIOFLEX ULTRA

- PTFE - The Optimum Choice For Hose Linings **Page 3**
- Bioflex Ultra - The New Product Design from Aflex Hose **Page 4**
- Bioflex Ultra Hose Design and Comparative Properties **Page 5**
- Bioflex Ultra Hose - Special Test Programs **Page 6**
- Bioflex Ultra Temperatures, Pressures & Flow Rates **Page 7**
- Bioflex Ultra Sizes, Grades, Bend Radius and Dimensions **Page 8**
- Bioflex Ultra Sizes, Grades, Pressure Ratings and Weights **Page 9**
- Bioflex Ultra Special Usage Conditions **Page 10**
- Quality Assurance Certification & Approvals and Hose Testing **Page 11**
- How to Order Bioflex Ultra **Page 12**
- Bioflex Ultra EN 16643 Hose Assembly Electrical Property Grades **Page 13**
- Bioflex Ultra Part Number System **Page 14**

HOSE

- Bioflex Ultra Hose Liners **Page 15**
- Bioflex Ultra Hose Braids **Page 16**
- Bioflex Ultra Rubber Covers **Page 17**
- Bioflex Ultra External Protection Systems **Page 18**

FLANGE FITTINGS

- Flange Fittings, Non-Lined **Page 19**
- Flange Fittings, PTFE Lined **Page 20**

CAM AND GROOVE FITTINGS (CAMLOCKS)

- Female Cam & Groove Fittings, PTFE Lined and Non Lined **Page 21**
- Male Cam & Groove Fittings, PTFE Lined and Non Lined and Cam Male-to-Flange Adaptors, PTFE Lined **Page 22**

SANITARY TRICLAMP (TRICLOVER) FITTINGS

- Sanitary Triclamp (Triclover) Fittings, PTFE Lined Flared and Hot Formed **Page 23**
- Sanitary Triclamp (Triclover) Fittings, Non Lined **Page 24**
- 90˚ Elbow Sanitary Triclamp (Triclover) Fittings, Non Lined **Page 25**

HYGIENIC FITTINGS (EUROPEAN)

- DIN 11851 Male & Female Fittings, Non-Lined **Page 26**
- DIN 11851 Male & Female Fittings, PTFE Lined **Page 27**
- SMS and RJT Female Fittings, PTFE Lined, and RJT Female Fittings, Non-Lined **Page 28**

BSP, NPT & JIC THREADED FITTINGS (Not Lined)

- NPT & BSPT Fixed Male and NPT Fixed Female Fittings **Page 29**
- BSP 60˚ Cone Seat Female Fittings and Lug-Type Female Fittings **Page 30**
- 37˚ JIC Female Fittings & Adaptors **Page 31**

PTFE Dip Pipes

- PTFE Dip Pipes, Straight or 90˚ Elbow **Page 32**

90˚ELBOW FITTINGS

- 90˚ Elbow Fittings, PTFE Lined and Non-Lined **Page 33**

3-A SANITARY FITTINGS **Page 34**

HEAT JACKETED HOSE ASSEMBLIES

- Insulated Hose Assemblies **Page 35**
- Steam Heated Hose Assemblies (CH Grade) **Page 36**
- Electrically Trace Heated Hose Assemblies (ETH Grade) **Page 37**

BIOFLEX ULTRA STANDARD LABELLING, STREAMLINE TAGGING & COLOUR CODING **Page 38**

CORRECT HOSE CONFIGURATION & LENGTH CALCULATIONS

- for Bend Radius **Page 39**
- for Abrasion & Torque **Page 40**
- for Length Calculation **Page 41**

CONDITIONS OF SALE **Pages 42 & 43**

PTFE - The Optimum Choice For Hose Linings

Section from a PTFE Molecule, 16 Angstrom Units long

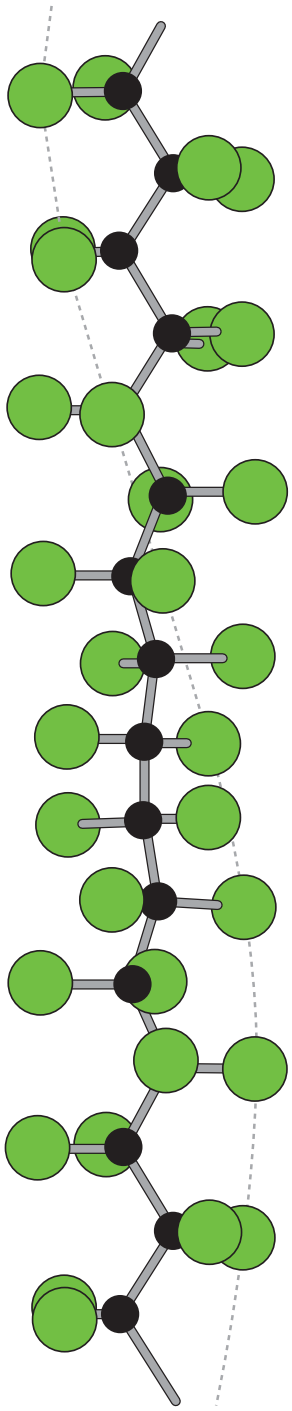

= **Fluorine Atom**

= **Carbon Atom**

PTFE, or Polytetrafluoroethylene, comprises of long-chain molecules of carbon atoms, each linked to two fluorine atoms.

The fluorine atoms provide a helical spiral which surrounds the carbon chain and protects it.

It is this structure which creates the unique properties for which PTFE is well-known.

- **Excellent Chemical Resistance**

  PTFE is renowned as the most chemically resistant material known. Only a very few, very unusual substances and conditions can affect it, like Fluorine gas at high temperature and pressure and liquid, boiling sodium metal.

  PTFE lined hoses can therefore be used for a wider variety of chemicals than any other hose type, making it the ideal choice for very corrosive chemical applications and multi-product applications.

- **Non-Stick Surface**

  The use of PTFE as a surface for cookware products has demonstrated to the world how easily cleanable PTFE surfaces are.

  This means that PTFE lined hoses can be purged 100% clean more quickly, easily and reliably than any other type of hose.

- **Excellent Temperature Range**

  The cookware application also demonstrates another of PTFE's many attributes - temperature resistance. PTFE itself can be used as a hose liner at temperatures from -150˚C up to +260˚C, dependent upon the hose design and the application conditions.

  This is the widest temperature range of any rubber or plastic hose lining material.

- **Very High Electrical Resistance**

  Most aerospace electrical wiring has a PTFE cover, due to the excellent electrical resistance of PTFE. This property is however, a disadvantage in some hose applications where there is a risk of developing an electrostatic charge inside the hose bore. Aflex Hose have developed a non-contaminant, FDA and USP Class VI compliant solution to this problem.

- **Hose Design**

  The only issue with PTFE as a hose lining material is the best way it can be integrated in to the hose design. This is where Aflex Hose have a proven record of success over the last 40 years.

Bioflex Ultra - The New Product Design from Aflex Hose

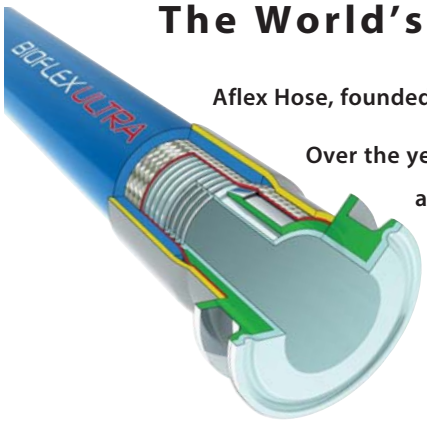

The World's Leading Manufacturer of PTFE Flexible Hose

Aflex Hose, founded in 1973, pioneered the concept of PTFE lined flexible hose for the transfer of process fluids.

Over the years since then, hundreds of thousands of custom-built PTFE Lined hoses have been designed and manufactured by Aflex Hose to cope with the most difficult of operating conditions, and Aflex have continuously developed and expanded their product range having pioneered and introduced Antistatic hose, Polypropylene Braided hose and many other innovations in response to customer demands.

In 2001, Aflex fulfilled the most stringent demand yet. Customers, worldwide, had always asked for the ultimate PTFE lined flexible hose... one product which incorporates the advantages of both convoluted and smoothbore designs. A product which is sufficiently flexible, like convoluted, yet which retains the advantages offered by smoothbore, like fast flow rate and cleanability.

After years of painstaking research and development, Aflex launched such a hose ..... **BIOFLEX.**

Bioflex is a smooth bore, highly flexible, PTFE lined hose. Its design overcomes the disadvantages of conventional smooth bore and convoluted PTFE flexible hose designs, dramatically improving on many of their individual technical performance parameters.

The key feature of Bioflex PTFE hose is the PTFE liner design, which comprises integral rib sections which support the tube against kinking, vacuum and pressure, and highly compressed web sections which give a smoothbore inner surface and excellent flexibility.

In 2013 in response to customer's requests for an even more flexible and kink resistant hose, Aflex re-designed the convolution profile of the Bioflex PTFE liner tube and introduced a high tensile, 316 stainless steel wire, helically wound in to the root of the convolutions. This wire provides greatly increased kink resistance by providing radial reinforcement to the tube, and axial reinforcement to the web section, preventing web section collapse when the tube is heavily flexed.

The actual bore size of the tube and hoses was also slightly increased to permit easier insertion of fittings. Hoses incorporating this PTFE liner tube design have been re-named as ..... BIOFLEX ULTRA.

Conventional Convoluted PTFE Liner

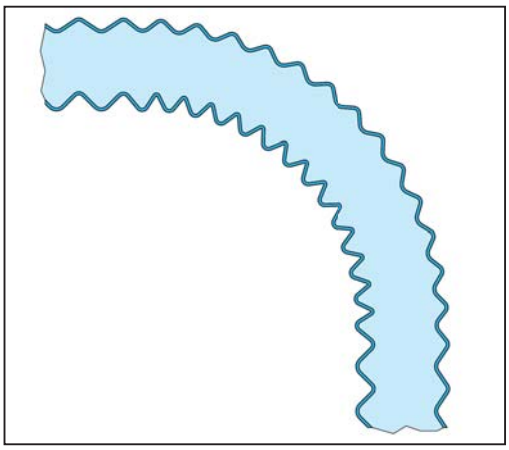

Bioflex Ultra PTFE Liner

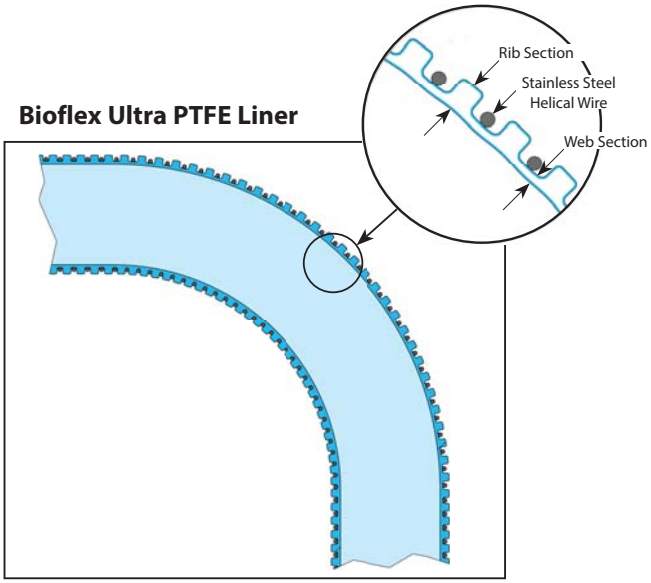

Note - *The new designs with the increased bores and the helical wire reinforcement only apply to the standard products. The 3/8" size will remain the same as before, with nominal bore size and no helical wire reinforcement.*

Bioflex Ultra Hose Design and Comparative Properties

Bioflex Ultra Hose Design Options

Bioflex Ultra Hose Grades are made up by combining the Design Options, which are defined by 2 letters as shown below, and fully described on the indicated pages.

For example, "Bioflex Ultra AS, PB, SG" defines a hose with an Antistatic PTFE liner (AS) and a Polypropylene braid (PB) and an outer "Safegard" (SG) spiral HDPE protection sleeve.

PTFE Liner Tube Options -	**GP** (Natural PTFE) and **AS** (Antistatic PTFE) -	Page 15
Braid Options -	**TO** (Tube Only, No Braid), **SS** (316 SS Wire), and **PB** (Polypropylene) -	Page 16
Rubber Cover Options -	**RC** (Blue EPDM), **BK** (Black EPDM) and **SI** (Silicone Rubber) -	Page 17
External Protection Options -	**SR** (Scuff Rings), **SG** (Safegard Spiral) and **PC** (SS Wire Coil) -	Page 18

BIOFLEX ULTRA GP, SS WITH A PTFE LINED SANITARY TRICLOVER FITTING

***Note**: Rubber covered hose is marked in accordance with EN 16643*

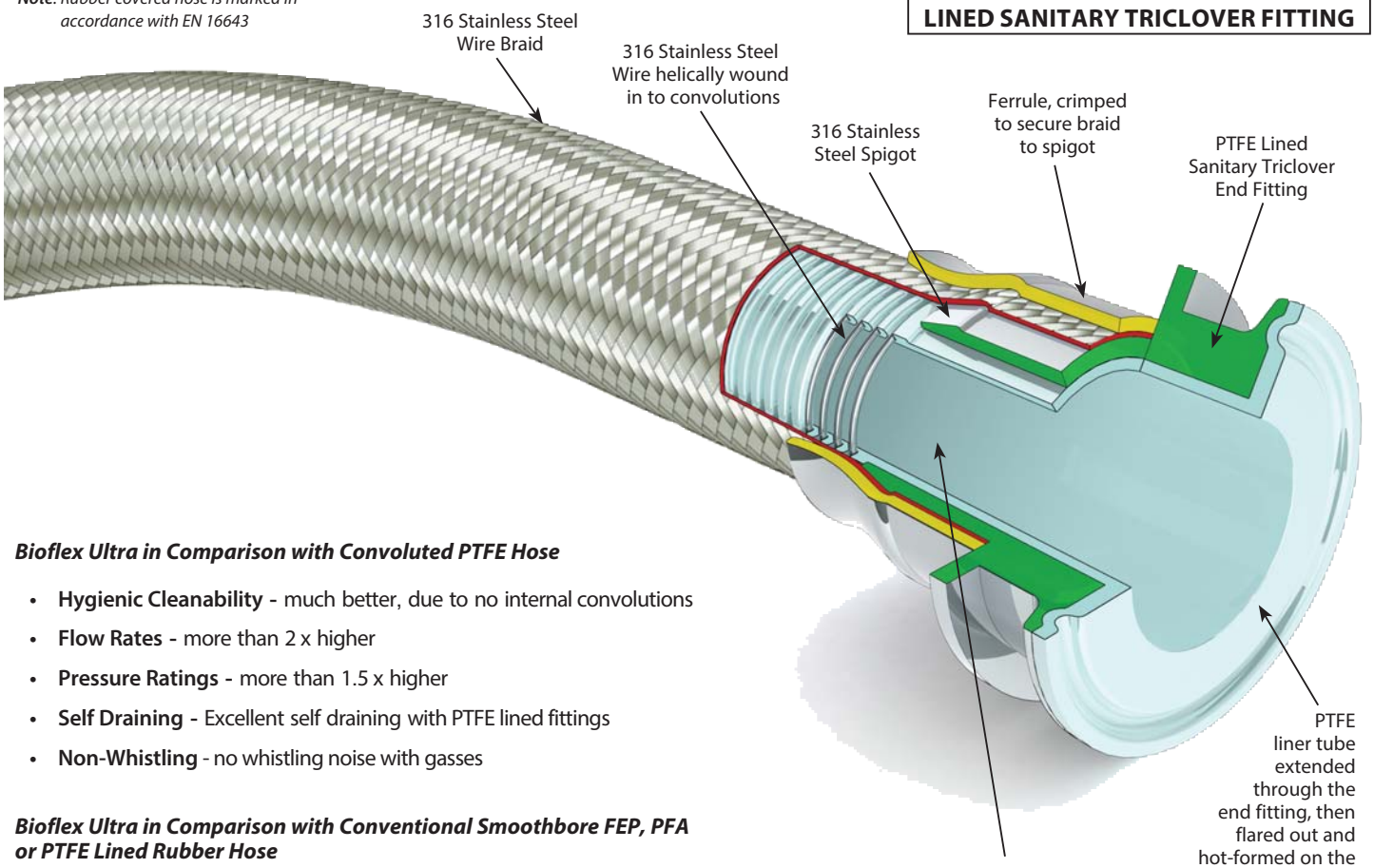

Bioflex Ultra in Comparison with Convoluted PTFE Hose

- **Hygienic Cleanability -** much better, due to no internal convolutions
- **Flow Rates -** more than 2 x higher
- **Pressure Ratings -** more than 1.5 x higher
- **Self Draining -** Excellent self draining with PTFE lined fittings
- **Non-Whistling** - no whistling noise with gasses

Bioflex Ultra in Comparison with Conventional Smoothbore FEP, PFA or PTFE Lined Rubber Hose

- **No Adhesives -** No toxic adhesives used in the Bioflex Ultra construction, eliminating the possibilities of Process Fluid contamination in service
- **Flexibility -** Much better flexibility
- **Internal Shape Control** - No distortions in bore when flexed

Bioflex Ultra in Comparison with Silicone Rubber Hose

- **Hygienic Cleanability -** much better, due to the non-stick PTFE Liner
- **Chemical Resistance -** considerably improved, particularly to strong oxidising acids and bases
- **Temperature & Pressure Ratings -** much higher temperature and pressure capability
- **Steam Resistance -** permanently resistant to steam sterilising (unlike silicone hose, which has a limited life)

Bioflex Ultra Hose: Special Test Program

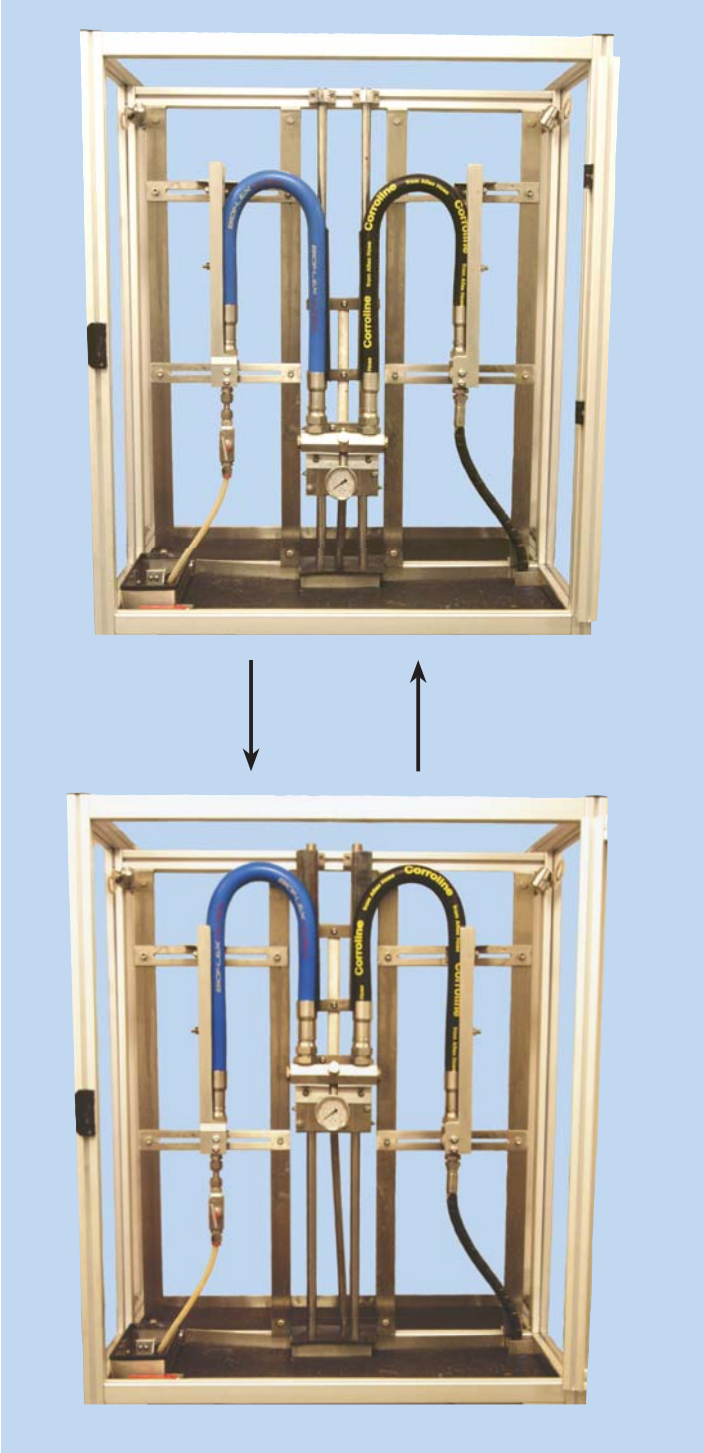

Bioflex Ultra has been designed to fulfil the most demanding of customer expectations and, as such, has been subjected to a rigorous Accelerated Service Life Testing Programme in comparison with competitive hose products.

The 'Rolling U' Test.

Bioflex Ultra samples were run side by side with competitors' products, including smoothbore FEP, PTFE or PFA lined Rubber hose products, and also smooth flex products, on a 'Rolling U' test rig.

The 1" bore samples were "Rolled" at the minimum bend radius and at the maximum working pressure quoted for the competitor's product.

Results were as follows:

- **Rubber Covered Bioflex Ultra Hose**
  - 300,000 cycles, no failure.
  - No leakage occurred, so test discontinued. No signs of damage, or wear.
- **Competitor's smooth bore FEP lined Rubber Covered Hose**
  - 9,149 cycles to failure.
  - Hose leakage caused by severe failure of the hose liner, breakage of the helix wire and damaged rubber and braid.
- **Competitor's convoluted smooth flex type hose, SS Braid**
  - 7,151 cycles to failure.
  - Hose leakage caused by very severe failure of the hose liner and braid components.

These remarkable results confirm the claims made by Aflex, that Bioflex Ultra is the best designed, toughest and most reliable PTFE lined hose product available today.

A video of the 'Rolling U' Test can be viewed on request from Aflex Hose

Bioflex Ultra Specifications: Temperatures, Pressures & Flow Rates

Temperature vs Pressure

Due to its extremely strong construction, Bioflex Ultra has outstanding resistance to temperature and pressure, much higher than that of conventional convoluted PTFE lined hose.

Maximum Working Pressure (MWP) Variation with Temperature:

MWP for SS grade hose, also for RC, BK and SI grades are as given in the graph, BUT only within the temperature range for the particular grade of hose, as given below:

Temperature & Maximum Working Pressure Graph for Bioflex Ultra

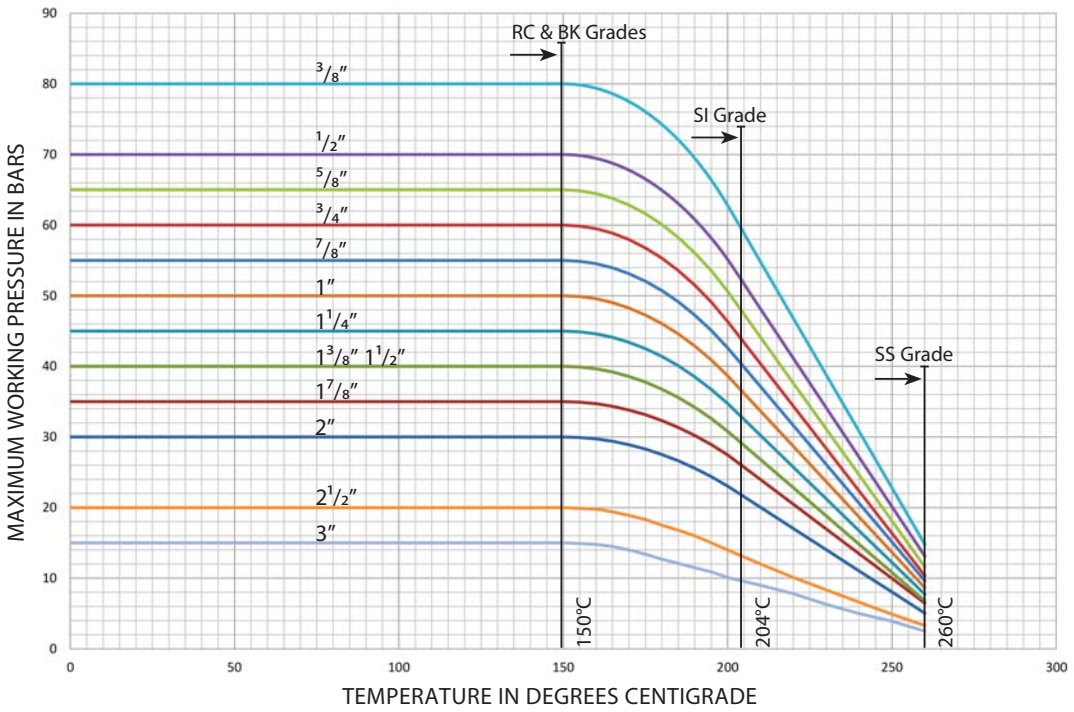

Min/Max Operating Temperatures:

Bioflex Ultra GP or AS	SS	-73˚C to +260˚C
Bioflex Ultra GP or AS	SS,RC & SS, BK	-40˚C to +150˚C
Bioflex Ultra GP or AS	SS, SI	-73˚C to +204˚C

Bioflex Ultra GP or AS PB - MWPs for PB are as given in the table up to 80˚C, then reduced by 50% between 80˚C and 100˚C (the maximum for PB). Min temperature -30˚C.

Temperature vs Vacuum

All sizes and grades of Bioflex Ultra hose are usable at vacuum to -0.9bar up to 200˚C (100˚C for TO grades). Above this, the vacuum resistance should be reduced 2% for every degree above 200˚C (100˚C for TO grades).

Flow Rates

In practice, flow rates will vary with hose flexing, fluid viscosity, end fitting design and other parameters, but Bioflex Ultra hose flow rates are always around 2 times better than convoluted PTFE hose, when comparing hose assemblies with PTFE lined (non bore-restricted) end fittings.

Bioflex Ultra Hose - Flow Rate Calculation

If it is required to determine the flow rate of a particular hose assembly, or if it is required to determine the pressure required to generate a certain flow rate, then this can sometimes be approximately calculated by the Bioflex Ultra supplier.

It should be noted that calculations can only be made for fluids with a viscosity equal to water, and for hose assemblies with PTFE lined end fittings (no bore restrictions at the ends of the hose).

The following information should be given to the supplier:

To calculate the Flow Rate in Cubic Metres per Hour:

- Pressure in Bars at the Entry into the Hose Assembly
- Pressure in Bars at the Exit from the Hose Assembly

> (Subtracted to calculate Pressure Drop over the Hose Length

- The hose configuration (roughly straight, or 33% Bends, or 66% Bends, or 100% Tightly Coiled)

<u>OR</u> To Calculate the Pressure Drop in bars over the length of the Hose Assembly:

- Required Flow Rate in Cubic Metres per Hour
- The hose configuration (roughly straight, or 33% Bends, or 66% Bends, or 100% Tightly Coiled)

Bioflex Ultra Sizes, Grades, Bend Radius and Dimensions

Nominal Hose Bore Size		Actual Bore Size		Bioflex Ultra Grade (Braid & Cover)	Helical Wire	O/D of Tube, Braid or Rubber		Minimum Bend Radius		† Maximum Continuous Hose Length	
in	mm	in	mm			in	mm	in	mm	Ft	Mtrs
3/8	9.5	0.375	9.5	TO	-	0.47	12.0	1 3/8	35	100	30
		0.375	9.5	SS	-	0.50	12.8	3/4	19	100	30
		0.375	9.5	RC/BK/SI	-	0.61	15.5	3/4	19	100	30
1/2	15	0.530	13.5	TO	√	0.654	16.4	2 3/8	60	100	30
		0.530	13.5	SS	√	0.700	17.8	1 1/2	38	100	30
		0.530	13.5	PB	√	0.800	20.5	1 1/2	38	100	30
		0.530	13.5	RC/BK/SI	√	0.845	21.4	1 1/2	38	100	30
5/8	16	0.650	16.5	TO	√	0.780	20.1	2 1/2	64	100	30
		0.650	16.5	SS	√	0.850	21.6	1 3/4	45	100	30
		0.650	16.5	PB	√	0.955	24.3	1 3/4	45	100	30
		0.650	16.5	RC/BK/SI	√	0.990	25.2	1 3/4	45	100	30
3/4	20	0.780	19.8	TO	√	0.920	23.4	3	75	100	30
		0.780	19.8	SS	√	0.980	24.9	2	50	100	30
		0.780	19.8	PB	√	1.085	27.6	2	50	100	30
		0.780	19.8	RC/BK/SI	√	1.120	28.5	2	50	100	30
* 7/8	22	0.875	22.2	TO	√	1.040	26.4	3 1/2	90	100	30
		0.875	22.2	SS	√	1.090	27.7	2 1/8	55	100	30
		0.875	22.2	PB	√	1.240	31.5	2 1/8	55	100	30
		0.875	22.2	RC/BK/SI	√	1.260	32.0	2 1/8	55	100	30
1	25	1.030	26.1	TO	√	1.200	30.5	4 3/4	110	100	30
		1.030	26.1	SS	√	1.255	31.9	2 3/4	70	100	30
		1.030	26.1	PB	√	1.455	37.0	2 3/4	70	100	30
		1.030	26.1	RC/BK/SI	√	1.455	37.0	2 3/4	70	100	30
1 1/4	32	1.280	32.5	TO	√	1.490	37.8	5 1/2	140	100	30
		1.280	32.5	SS	√	1.555	39.5	4	100	100	30
		1.280	32.5	PB	√	1.740	44.2	4	100	100	30
		1.280	32.5	RC/BK/SI	√	1.755	44.6	4	100	100	30
* 1 3/8	35	1.375	34.9	TO	√	1.590	40.3	6 1/2	160	100	30
		1.375	34.9	SS	√	1.665	42.3	4	100	100	30
		1.375	34.9	PB	√	1.850	47.0	4	100	100	30
		1.375	34.9	RC/BK/SI	√	1.865	47.4	4	100	100	30
1 1/2	40	1.530	38.8	TO	√	1.750	44.5	7	180	100	30
		1.530	38.8	SS	√	1.840	46.7	5 1/2	140	100	30
		1.530	38.8	PB	√	2.020	51.4	5 1/2	140	100	30
		1.530	38.8	RC/BK/SI	√	2.035	51.7	5 1/2	140	100	30
* 1 7/8	48	1.875	47.6	TO	√	2.145	54.4	11	280	100	30
		1.875	47.6	SS	√	2.220	56.4	6 5/8	170	100	30
		1.875	47.6	PB	√	2.410	61.3	6 5/8	170	100	30
		1.875	47.6	RC/BK/SI	√	2.410	61.3	6 5/8	170	100	30
2	50	2.030	51.5	TO	√	2.320	58.9	12	300	100	30
		2.030	51.5	SS	√	2.390	60.7	8	200	100	30
		2.030	51.5	PB	√	2.575	65.4	8	200	100	30
		2.030	51.5	RC/BK/SI	√	2.580	65.6	8	200	100	30
2 1/2	65	2.508	63.7	SS	√	2.965	75.3	11 7/8	300	60	18
		2.508	63.7	PB	√	3.181	80.8	11 7/8	300	60	18
		2.508	63.7	RC/BK/SI	√	3.169	80.5	11 7/8	300	60	18
3	80	3.024	76.8	SS	√	3.457	87.8	13 3/4	350	50	15
		3.024	76.8	PB	√	3.732	94.8	13 3/4	350	50	15
		3.024	76.8	RC/BK/SI	√	3.654	92.8	13 3/4	350	50	15

**The 7/8", 1 3/8" and 1 7/8" hose sizes are only suitable for use with PTFE lined sanitary clamp (or triclover) end fittings and PTFE lined I-Line end fittings.*

† Longer lengths may be available to special order.

Note: 2 1/2" & 3" TO cannot be ordered as an assembly.

Bioflex Ultra Sizes, Grades, Pressures & Weights

Nominal Hose Bore Size		Actual Bore Size		Bioflex Ultra Grade (Braid & Cover)	Helical Wire	**Maximum Working Pressure of Hose		Burst Pressure		Weight per Unit Length	
in	mm	in	mm			Bar	psi	Bar	psi	Kg/Mtr	lb/ft
3/8	9.5	0.375	9.5	TO	-	5	72	20	290	.06	.04
		0.375	9.5	SS	-	80	1160	500	7200	.14	.09
		0.375	9.5	RC/BK/SI	-	80	1160	500	7200	.22	.15
1/2	15	0.530	13.5	TO	√	5	72	20	290	.15	.10
		0.530	13.5	SS	√	70	1015	400	5800	.29	.19
		0.530	13.5	PB	√	35	500	140	2000	.22	.15
		0.530	13.5	RC/BK/SI	√	70	1015	400	5800	.39	.26
5/8	16	0.650	16.5	TO	√	5	72	20	290	.17	.11
		0.650	16.5	SS	√	65	940	380	5500	.35	.23
		0.650	16.5	PB	√	33	480	130	1900	.25	.17
		0.650	16.5	RC/BK/SI	√	65	940	380	5500	.47	.31
3/4	20	0.780	19.8	TO	√	5	72	20	290	.20	.13
		0.780	19.8	SS	√	60	870	300	4350	.40	.27
		0.780	19.8	PB	√	30	440	120	1750	.28	.19
		0.780	19.8	RC/BK/SI	√	60	870	300	4350	.55	.37
* 7/8	22	0.875	22.2	TO	√	4	60	16	230	.34	.23
		0.875	22.2	SS	√	55	800	220	3200	.60	.40
		0.875	22.2	PB	√	27.5	400	110	1600	.44	.30
		0.875	22.2	RC/BK/SI	√	55	800	220	3200	.82	.55
1	25	1.030	26.1	TO	√	4	60	16	230	.36	.24
		1.030	26.1	SS	√	50	720	200	2900	.63	.42
		1.030	26.1	PB	√	25	360	100	1450	.47	.31
		1.030	26.1	RC/BK/SI	√	50	720	200	2900	.92	.62
1 1/4	32	1.280	32.5	TO	√	3	43	12	175	.45	.30
		1.280	32.5	SS	√	45	650	180	2600	.85	.57
		1.280	32.5	PB	√	23	330	90	1300	.72	.48
		1.280	32.5	RC/BK/SI	√	45	650	180	2600	1.15	.77
* 1 3/8	35	1.375	34.9	TO	√	2	29	8	116	.68	.46
		1.375	34.9	SS	√	40	580	160	2320	1.14	.77
		1.375	34.9	PB	√	20	290	80	1160	1.00	.67
		1.375	34.9	RC/BK/SI	√	40	580	160	2320	1.51	1.01
1 1/2	40	1.530	38.8	TO	√	2	29	8	116	.66	.44
		1.530	38.8	SS	√	40	580	160	2320	1.10	.74
		1.530	38.8	PB	√	20	290	80	1160	.90	.60
		1.530	38.8	RC/BK/SI	√	40	580	160	2320	1.55	1.04
* 1 7/8	48	1.875	47.6	TO	√	2	29	8	116	1.12	.75
		1.875	47.6	SS	√	35	500	140	2000	1.70	1.14
		1.875	47.6	PB	√	18	250	72	1040	1.40	.94
		1.875	47.6	RC/BK/SI	√	35	500	140	2000	2.22	1.49
2	50	2.030	51.5	TO	√	2	29	8	116	1.25	.84
		2.030	51.5	SS	√	30	430	120	1750	1.90	1.27
		2.030	51.5	PB	√	15	215	60	870	1.60	1.07
		2.030	51.5	RC/BK/SI	√	30	430	120	1750	2.56	1.71
2 1/2	65	2.508	63.7	SS	√	20	290	80	1160	2.58	1.73
		2.508	63.7	PB	√	12	174	48	696	2.38	1.59
		2.508	63.7	RC/BK/SI	√	20	290	80	1160	3.59	2.41
3	80	3.024	76.8	SS	√	15	218	60	870	3.13	2.10
		3.024	76.8	PB	√	10	145	40	580	3.02	2.02
		3.024	76.8	RC/BK/SI	√	15	218	60	870	4.30	2.96

**The 7/8", 1 3/8" and 1 7/8" hose sizes are only suitable for use with PTFE lined sanitary clamp (or triclover) end fittings and PTFE lined I-Line end fittings.*

*** The Maximum Working Pressure of a hose assembly is limited to the lowest of the MWP's of either of the two end fittings, or of the hose itself as listed above. The MWP of the hose reduces as the operating temperature increases as specified in the Graph on the 'Bioflex Ultra Specification' page 7.*

Note: 2 1/2" & 3" TO cannot be ordered as an assembly.

Bioflex Ultra Hose: Special Usage Conditions

- **Cleaning & Sterilising Systems - CIP, SIP and Autoclave**

  CIP & SIP – PTFE liner tubes are chemically resistant to all CIP, SIP and Autoclave conditions. A primary consideration is whether the cleaning and purging cycle is likely to develop an electrostatic charge on the internal surface of the liner, in which case AS (Anti-Static) grade hose is required.

  AS grade hose and Electrostatic charge generating systems are fully described in the hose liner section.

  CIP systems using high electrical resistivity solvents like Toluene will require AS grade hose.

  Another electrostatic generation problem arises when wet steam is passed through, or when the cleaning fluids or WFI are purged out of the line using nitrogen, compressed air or another gas, because droplets of liquid or water in the gas then generate a multi-phase condition until they are cleared out, which will generate a static charge, and so will require AS grade hose.

  In static generating applications where AS grade hose is not acceptable due to the black PTFE liner, alternative solutions may be available – please consult Aflex Hose for advice.

- **Autoclave**

  Autoclave sterilisation does not normally involve any high flow rates through the hose bore, so static generation is not a problem. Aflex hose grades GP and AS, with SS braids are fully resistant to all autoclave conditions throughout the service life of the hose.

  The rubber covered grades EPDM, (RC and BK) and Silicone Rubber (RC, SI) are able to withstand at least 300 x 30 minute autoclave cycles at relatively high autoclave temperatures (up to 135°C, 275°F). Please note that in robust applications covers may become more susceptible to tearing after extended autoclave cycles. Consult Aflex Hose for more specific information.

- **PTFE Hose-Use with Alkali Metals, Halogens and certain Halogens containing Chemicals**

  PTFE hose liners react chemically with Fluorine, Chlorine Trifluoride and molten Alkali Metals and so no hose grades are suitable for use with these chemicals.

  When PTFE lined hose is used to carry Chlorine or Bromine, either as gasses or fluids, trace quantities can diffuse into and through the PTFE liner wall thickness. These will then combine with atmospheric moisture to corrode any SS, PB or RC outside the liner tube. It has been found that Corroflon SP, HB or KYB hose is best suited for these applications - Please consult the Corroflon brochure.

  Depending upon the internal pressures and temperatures, some other gasses and fluids with a high halogen content may also be transmitted in trace quantities through the wall of the PTFE tube, including Hydrogen Fluoride, Hydrogen Chloride, Carbonyl Chloride (Phosgene), Carbon Tetrachloride and others. Please consult with Aflex Hose for a suitable hose grade recommendation.

- **Other "Penetrating" Fluids and Gases**

  Sulphur Trioxide, Methyl Methacrylate, Caprolactam and Glacial Acetic Acid are some other chemicals which do not react chemically with the PTFE, but which can be absorbed and transmitted through the PTFE liner tube wall - please consult Aflex Hose for the optimum solution with these chemicals.

  Generally, however, as a hydrophobic (non-wetting) material, PTFE is very resistant to the absorption of chemicals. In some cases, PTFE has superior resistance to diffusion, for example to the diffusion of automotive fuels, in comparison with all other plastics and rubbers.

- **Gas/Fluid Cycling**

  There are some applications where fluids then gasses are passed through the hose, in a cyclic sequence.

  This is normally associated with changes in temperature and/or pressure. For complex reasons these conditions are extremely damaging to the hose liner, whatever material it is made from.

  For example, hoses are sometimes used to pass steam, water, steam etc into rubber moulding presses, in order to heat the mould, then rapidly cool it before reheating in the next cycle. Hoses of all types fail rapidly in such an application and PTFE lined hoses are no exception.

  Please contact Aflex Hose for further information if these conditions apply.

- **Connecting Assemblies for Use in Applications**

  The lengths of hose assemblies and their configuration in use when connected into the application must always be in accordance with the Hose Configuration information at the end of this product literature.

  When being connected for use in applications, the end fittings on hose assemblies must be connected to correct mating parts in the correct way, using the correct tools, spanners, clamps, nuts and bolts etc. The connections must be sufficiently tightened to ensure that the joint is leak free but not be over tightened as this can damage the sealing surfaces, especially with PTFE lined and flared end fittings.

  In applications involving the transfer through the hose of expensive or dangerous fluids or gases, the hoses and connections must be pressure tested in situ before being put in to service. This should be done with some harmless media to 2.0 times the maximum working pressure of the hose assembly, as stated in the product literature.

  If in doubt please contact Aflex Hose for advice.

- **Special Applications**

  Aflex Hose PTFE lined hose products are not rated as suitable for use in the following, special applications:

  - All Radioactive Applications involving high energy radiation, including Gamma radiation (degrades PTFE)
  - All Medical Implantation Applications.
  - All Aerospace Applications, except by special prior agreement, confirmed in writing.

- **Silicone-Free Application requirements**

  Some applications, particularly paint manufacturing plants, and other specialised applications require that hoses do not include any silicone containing materials in their manufacture, or sometimes that hoses are guaranteed to be 100% Silicone Free. Customers or Distributors must specifically identify and define any such requirements in writing on all enquiries/orders.

BIOFLEX ULTRA

Quality Assurance, Certification and Approvals and Hose Testing

EN ISO 9001:2015

Aflex products are all manufactured in accordance with BS EN ISO 9001 Quality Management Systems independently assessed and registered by The British Standards Institution (BSI).

EN 16643:2016

Bioflex Ultra meets the requirements of EN 16643 (SC), which include the electrical and electrostatic requirements of hose assemblies.

IATF 16949:2016

Aflex Hose Ltd manufactures PTFE flexible hose for the automotive industry in accordance with IATF 16949 and is assessed and certified by The British Standards Institution (BSI).

ISO 14001:2015

Aflex Hose Ltd have been successfully assessed to the requirements of ISO 14001, by the British Standards Institution (BSI).

By gaining this accreditation Aflex Hose Ltd are demonstrating our commitment to reducing our impact on the environment.

OHSAS 18001:2007

Aflex Hose Ltd have been successfully assessed to the requirements of OHSAS 18001, by the British Standards Institution (BSI). By gaining this accreditation Aflex Hose Ltd are demonstrating our commitment to the health and safety of our employees by consistently identifying and controlling risks to health and safety, reducing the potential for accidents, complying to relevant legislation and improving overall awareness throughout the business.

USP Class VI and ISO 10993-5, 6, 10 and 11 guidelines

Natural and Antistatic PTFE Hose Liners, Platinum Cured Silicone Rubber Covers (White and Clear) and EPDM Rubber Cover (Blue) have been independently tested in accordance with USP protocols and are found to conform to the requirements of USP Class VI Chapter <88>.

Natural and Antistatic PTFE Hose Liners now also meet the more stringent USP Class VI and ISO 10993-6,10 and 11 guidelines at 121˚C (250˚F) with a "no reaction" classification.

Natural and Antistatic PTFE Hose Liners and Platinum Cured Silicone Rubber Covers (White and Clear) have also been tested in accordance with USP protocols and are found to conform to the requirements of USP Class VI <87>, the L929 MEM Elution Test and are considered non-cytotoxic.

Natural and Antistatic PTFE Hose Liners have now been further tested and have passed the more stringent USP Class VI and ISO 10993-5 guidelines at 121˚C (250˚F).

USP <661> Physicochemical Test for Plastics

Natural and Antistatic (Carbon filled) Externally Convoluted Smoothbore PTFE hose has been tested in accordance with USP Physicochemical Test for Plastics and found to meet the criteria of the following reference: USP34, NF 29, 2011. Monograph <661> Containers, Physicochemical Test-Plastics.

FDA

The Materials used to manufacture the natural PTFE Tube liner conforms to FDA 21 CFR 177.1550, and the antistatic PTFE liner conforms to FDA 21 CFR 178.3297.

3-A Sanitary Standards 62-02

Bioflex Ultra hose assemblies accredited to 3-A Sanitary Standards 62-02 are identified within the product brochure.

BPSA leachables and extractables testing

Aflex Hose Natural and Antistatic PTFE Hose Liner Tube has been independently tested in accordance with BPSA recommendations, and found to be satisfactory.

Copies of the Test Report are available for specific assessments to be made.

Flame Resistant

To special order only, Aflex Hose are able to supply hose with a special rubber cover which is compliant with the requirements of BS EN 45545, DIN 5510 and NFF 16101 specifications.

Pharmaceutical Manufacturers Approvals

Most of the major pharmaceutical manufacturing companies in the world have audited and/or approved Aflex Hose as a Hose Supplier.

CE Marking (Europe only)

Aflex has been assessed by The British Standards Institution (BSI) and found to comply with the Pressure Equipment Directive 2014/68/EU Conformity Assessment Module D1, approved to CE Mark applicable hose products, accompanied by a Hose Usage Data Sheet, and a Declaration of Conformity.

Attestations of Conformity to ATEX Directive 2014/34/EU (Potentially Explosive Atmospheres)

Available for hose assemblies for components used in Gas Zones 1 & 2 and Dust Zones 21 & 22, when applicable.

Material Certification to EN10204

Available for all the hose or hose assembly components.

Certificates of Conformity to EN ISO/IEC 17050

Are available for all products.

Hose Testing

Each assembly is pressure tested to 2.0 times maximum working pressure before despatch, and pressure test certificates can be supplied.

Fire Resistance to BS5173 Section 103.13 Part 6.2 and 6.3

BK Grade Bioflex Ultra hose assemblies are "Fire Resistant". If DRC-300 is added at both ends, the assemblies are upgraded to "Fire Proof".

Food Contact

Manufactured in compliance with **Regulation (EC) No 1935/2004** - on materials and articles intended to come in to contact with food, **Commission regulation (EU) No 10/2011** - relating to plastic materials and articles intended to come into contact with food and **Regulation (EC) No 2023/2006** - on good manufacturing practise for materials and articles intended to come in to contact with food.

How to Order Bioflex Ultra Hose & Hose Assemblies

How to Order

The quantity, hose size, liner, braid, cover, protection system, length and fittings must be selected and specified in full.

EITHER by a full, written description. The hose grade can be specified by the code initials e.g. "Bioflex Ultra AS, SS, RC, DRC-300" defines an antistatic PTFE lined hose with an EPDM rubber cover over a SS braid, with a double rubber cover at both ends.

The quantity, length and fittings can then be written in - e.g. "4 off x 1" bore Bioflex Ultra, AS, SS, RC, DRC-300 hose x 3.00 metres long. Both ends non-lined ANSI 150# S/S Flanges".

OR by Part Numbers, as defined on page 13. Example from above "4 off Part No. 16-BFXU/AS-RC-00-3.00m-12-12, with DRC 300 at both ends".

Any special requirements relating to the hose construction, or information required on Tags, or Certificates, or special testing of requirements, must be specified in full on the enquiry or purchase order.

Selecting the Hose Grade

There are two types of PTFE liner available, natural (GP) and anti-static (AS) and two types of braid; Grade 316 stainless steel (SS) and polypropylene (PB). These are described on page 15 & 16. Rubber covering and other external protection systems are also available, described on pages 17 & 18.

A hose grade is specified by using the abbreviations given. For example, Bioflex Ultra AS,PB would describe a hose with an anti-static PTFE liner and a polypropylene braid.

Selecting the End Fittings

Bioflex Ultra is available with a range of 'standard' end fittings (described on pages 19-33), normally supplied hygienically PTFE lined and flared.

Stainless Steel End Fitting Materials

- **Non-Lined Spigots** - are made from Grade 316L SS
- **PTFE Lined Spigots** - are made from Grade 316L or Grade 316C SS
- **Cam and Groove Female Fittings** - are made from Grade 316C SS (Body) and 316L SS (Spigot)
- **Swivelling Nuts and Flanges** - are made from Grade 304 SS
- **Ferrules** - most ferrules are made from Grade 304 SS, except some are made from Grade 316L SS - consult AH if necessary.

The equivalent specification for the different Grades of Stainless Steel are listed below:

Specification Equivalents List

Grade	BS - British Standard	AISI - American Standard or C = Casting Grade	EN - European Norm
316L SS	BS 316 S11	AISI 316 L	EN 1.4404
316C SS	BS 316 C16	CF8M	EN 1.4408
304 SS	BS 304 S15	AISI 304	EN 1.4301

To special order, end fitting components can be made in non-standard grades of SS such as 1.4435, or other materials such as Hastelloy or Monel.

Conditions of Sale

Bioflex Ultra hose and hose assemblies are only supplied on the basis that the customer has read and accepted the Conditions of Sale as given on pg's 41/42. Customers own Conditions of Sale (or equivalent) are not accepted unless an acceptance, signed by a Director of Aflex Hose is supplied.

Selecting the Hose Length (see also pages 39 - 41)

Bioflex Ultra hose assemblies are made up to the specific lengths required. The hose length is taken as the length from the sealing face at one end of the hose to the same at the other end. The length tolerance is normally +2% / -0%. Closer tolerances are available to special order.

Bioflex Ultra Hose Assembly Length Limitations *

Nominal Size of Hose		Minimum Hose Length Between Fittings						† Maximum Hose Assembly Length	
		Used Straight		Flexed through 90°					
		All Grades		TO, KYB Grades		SS, PB RC Grades			
in	mm	in	mm	in	mm	in	mm	ft	mtrs
3/8	10	3	75	3.00	75	3.00	75	100	30
1/2	15	3	75	3.00	75	3.00	75	100	30
5/8	16	3	75	4.00	100	3.00	75	100	30
3/4	20	3	75	4.72	120	4.00	100	100	30
7/8	22	3	75	5.71	145	4.00	100	100	30
1	25	3	75	6.89	175	4.33	110	100	30
1 1/4	32	4	100	8.66	220	6.30	160	100	30
1 3/8	35	4	100	10.04	255	7.48	190	100	30
1 1/2	40	4	100	11.22	285	8.66	220	100	30
1 7/8	48	4	100	17.32	440	11.81	300	100	30
2	50	4	100	18.70	475	12.40	315	100	30
2 1/2	65	4	100	27.95	710	18.70	475	60	18
3	80	4	100	32.48	825	21.65	550	50	15

** Listed minimum lengths are for the Bioflex Ultra Hose only, and DO NOT INCLUDE THE LENGTHS OF THE FITTINGS AT EACH END. These must be found from the end fitting pages and added to calculate the minimum length of the hose assembly.*

† Longer lengths may be available to special order.

Bioflex Ultra
EN 16643 Hose Assembly Electrical Property Grades

The hose assembly electrical property grades and electrical resistance limits are defined within EN 16643 and tested in accordance with BS EN ISO 8031. Aflex Hose electrically conductive (**EC**) assemblies are defined in EN 16643 as *electrically bonded* and given the symbol **M**. M-grade assemblies exhibit a maximum electrical resistance of 100Ω between end fittings. Aflex Hose anti-static (**AS**) PTFE liners and rubber covers are termed *static dissipative* within EN 16643 and given the symbol **Ω** followed by letters that specify either the liner, cover or both; **L**=liner, **C**=cover, **CL**= cover & liner. Ω-grade covers or liners exhibit an electrical resistance of 10^3-10^8Ω.

The table below identifies each EN 16643 electrical grade for a hose assembly along with a brief description and example assembly configuration.

EN16643 Electrical Grade For Hose Assembly	EN16643 Description	Example Hose Assembly
Grade M	Electrically bonded without static-dissipative lining or cover	BFXU/GP SI Ends ASA150 Lined BFXU/GP PB Ends: Triclover
M/Ω-L	Electrically bonded and static-dissipative lining	BFXU/AS SI Ends ASA150 Lined BFXU/AS PB Ends: Triclover
M/Ω-C	Electrically bonded and static-dissipative cover	BFXU/GP BK Ends ASA150 Lined
M/Ω-CL	Electrically bonded and static-dissipative cover and lining	BFXU/AS BK Ends ASA150 Lined
I	Electrically insulated (no electrical bonding AND no static-dissipative layers)	BFXU/GP PB EC wire & helix wire insulated Ends ASA150 Lined (Special order)
Ω-L	Static dissipative lining without electrical bonding	BFXU/AS PB EC wire & helix wire insulated Ends ASA150 Lined (Special order)
Ω-C	Static dissipative cover without electrical bonding	BFXU/GP BK Ends ASA150 PP spigot and flange (special order)
Ω-CL	Static dissipative cover and lining without electrical bonding	BFXU/AS BK Ends ASA150 PP spigot and flange (special order)

Bioflex Ultra Hose Assembly Part Number System

If required, Bioflex Ultra Hose Assembly can be defined by an individual Part Number, made up of **7** entries as below:

1

Hose Size	Size Part No.
3/8"	06
1/2"	08
5/8"	10
3/4"	12
7/8"	14
1"	16
1 3/8"	22
1 1/2"	24
1 7/8"	30
2"	32
2 1/2"	40
3"	48

2

Hose Type	Type Part No.
Bioflex Ultra GP (Natural PTFE Liner)	BFXU/GP
Bioflex Ultra AS (Antistatic PTFE Liner)	BFXU/AS

3

Braid and Cover	
Tube Only	TO
Stainless Steel Braid	SS
Polypropylene Braid	PB
Blue EPDM Rubber Cover (on SS)	RC
Transparent Silicone Rubber (on SS)	SI
Black Fireproof, Antistatic Rubber (on SS)	BK
RC-300 Rubber Covered End Protection Systems (Pg16) see *note below	

***Note** - *If one of the rubber end protection systems is required, for one or both ends, please define the requirement in writing in addition to Part Number.*

4

External Protection Systems	
No External Protection System	OO
SS Wire Protection Coil	PC
Rubber Anti-Scuff Rings	SR
'Safeguard' HDPE Spiral Wrap	SG

5

Length
The overall hose length between the sealing faces at each end is given as the **Length Part No** either in decimal Metres followed by 'm' or inches followed by 'in'

6 & 7

Assembled End Fitting Description * All Components in Stainless Steel	End Fitting Part No.
JIC Female	02
Fixed Male Pipe, NPT Thread	03
Fixed Male Pipe, BSPT Thread	03/B
Fixed Female Pipe, NPT Thread	06
JIC-to-NPT Male Union	08
JIC-to-Female Union	08F
Straight Sanitary Tri Clamp, 1.984" Diameter 0.870" Exit Diameter (Standard) 1.370" Exit Diameter (Step Up)	 10 10/S
Straight Mini Sanitary Tri Clamp, 0.984" Diameter 0.370" Exit Diameter (Standard) 0.625" Exit Diameter (Step-Up)	 11 11/S
*ANSI 150# Swivelling Flange Non-Lined	12
DIN PN 10/16 Swivelling Flange Non-Lined	12/PN
*ANSI 150# Swivelling Flange, PTFE Lined	12L
DIN PN 10/16 Swivelling Flange, PTFE Lined	12L/PN
Cam and Groove, Locking Arm Swivelling Female, Non-Lined	16
Cam and Groove, Locking Arm Female, PTFE Lined	16L
Cam and Groove Male, Non-Lined	17
Cam and Groove, Male PTFE Lined	17L
DIN 11851 Female, PTFE Lined	23L
DIN 11851 Male, PTFE Lined	24L
SMS Female, PTFE Lined	26L
RJT Female, Non-Lined	27
BSPP Cone Seat Female	33
BSP Lug Nut Female	34

Notes - ***For Flange only:*** *Add '/**ZP**' for Carbon Steel Zinc Plated, or add '/**EC**' for Epoxy coated*

Elbows: *For all types of Elbow fittings add '/**90°**' for 90°* elbows

Triclamps: *For 'Hot Formed' PTFE Lined Triclamps add '/**HF**'*

Additional Requirements:

- *Any additional requirements which are not included in the Part Number must be written out in full in the Order, including any special labelling or colour coding.*
- *When purchasing Triclovers/Sanitary Fittings please specify the surface finish required.*

Example:

A 3/4" bore Bioflex Ultra GP, RC Hose Assembly with an Antistatic PTFE Liner and an outer Safegard Sleeve with:

End (1) - a 3/4" ANSI 150# Swivel Flange, PTFE Lined

End (2) - a Cam and Groove Swivelling Female, PTFE Lined

and a Length of - 4ft 6 inches

Hose Assembly Part No. =	**12**	**-**	**BFXU/AS**	**-**	**RC**	**-**	**SG**	**-**	**54in**	**-**	**12L**	**-**	**16L**
Entry No.	**1**		**2**		**3**		**4**		**5**		**6**		**7**

Bioflex Ultra Hose Liners

*GP - General Purpose Liner

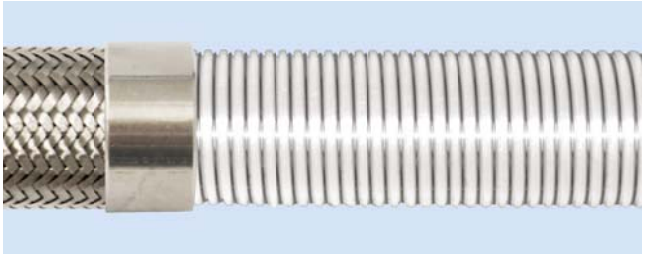

Purpose

Bioflex Ultra GP is the 'General Purpose' grade, for use in all applications where fluids or gases are being conveyed which do not generate a risk of static charge development (see "AS").

Design & Approvals

A full list of Approvals is given on Page 11.

Bioflex Ultra GP is a virgin PTFE liner, manufactured from hose grade PTFE which conforms to the requirements of:

FDA 21 CFR 177.1550

Bioflex Ultra GP hose liner tube has also been tested, and complies with USP Class VI, at 37˚C (99˚F), 70˚C (158˚F) and at 121˚C (250˚F) - see page 11.

Bioflex Ultra GP and AS PTFE Liner Tubes have also been tested for Leachables and Extractables in accordance with BPSA recommendations, and were found to be satisfactory.

EC - ELECTRICAL CONTINUITY
(Also known as 'Electrically Bonded')

All Bioflex Ultra hose assemblies are electrically continuous, except TO grade hose assemblies. Electrical Continuity requires that the hose assembly supplied is electrically continuous, or conductive, between metal end fittings at each end of the hose (whether GP or AS grade).

The requirements for this are specified in the German Document BRG 132 and EN 16643, when tested in accordance with EN ISO 8031, which requires that the resistance between end fittings shall be <100 Ohms per assembly. For hose assemblies which meet this requirement a Grade "M" marking is applied in accordance with EN 16643.

Grade TO (Tube Only) hose assemblies are not normally EC (Electrically Continuous), which means that the electrical resistance between end fittings will usually be more than 100 ohms. However, if EC or non-EC are specific requirements for the TO hose assembly, then it is possible to ensure either, but only if the requirement is discussed in detail with Aflex Hose at the enquiry stage.

*AS - Anti-Static PTFE Liner

Purpose

Bioflex Ultra AS is an essential requirement in applications where there is the risk of an electrostatic charge build-up on the inside surface of the PTFE tube which may then discharge through the tube wall. Media passing through which create such a risk are fluids which have a Conductance of less than 10^{-8} S/m (Siemens per Metre), or 10^{4} pS/m such as fuels, solvents, freons, some WFI (ultra-pure "Water for Injection") and non-polar organics which are being transferred at a medium to high flow velocity.

All twin or multi phase media, and any non-mixing media, such as powder in air, or water droplets in steam, in gases or in oil, also colloidal fluids constitute a particular hazard for static charge generation, and always require grade AS.

If in doubt, either order AS grade, or consult Aflex Hose.

Design & Approvals

Bioflex Ultra AS is an anti-static PTFE liner manufactured from FDA 21 CFR 177.1550 approved PTFE, mixed with less than 2.5% of 'high purity' Carbon Black material to FDA requirement 21 CFR 178.3297. Bioflex Ultra AS grade also meets the requirements of EC Directive 2007/19/EC. The carbon is encapsulated by the PTFE, and in normal, non-abrasive applications will not come loose to contaminate any fluid passing through.

Bioflex Ultra AS also conforms to USP Class VI, at 37˚C (99˚F), 70˚C (158˚F) and at 121˚C (250˚F) - see page 11.

Antistatic Hose Assemblies

When "AS" (Antistatic) grade hose is specified, then the hose or hose assembly supplied will be tested in accordance with EN ISO 8031 and meet the Antistatic requirements of EN 16643. This requires, for an antistatic liner or antistatic cover, that the resistance between an appropriately placed foam electrode and a metallic end fitting will be between 10^{3} to 10^{8} ohms per assembly. For hose assemblies which meet these requirements an appropriate Grade "Ω" marking is applied in accordance with EN 16643.

Note: When in service, at least one end fitting must be connected to earth, to permit dissipation of the static charge from the end fitting.

EXCEPTIONS -

The 3/8" hose size is not changed from the original Bioflex design. The hose liner tubes do not therefore, have increased bore size, and does not include a helical wire reinforcement as shown.

Bioflex Ultra Hose Braids

TO - Tube Only (no braid)

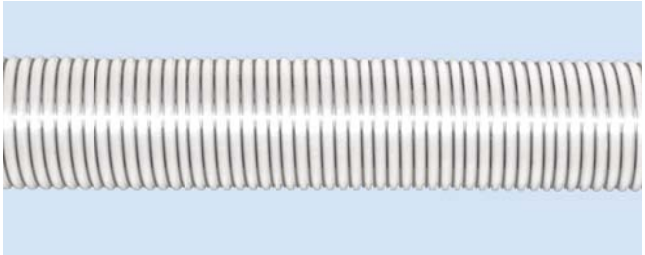

Purpose

TO grade hose (available in both GP and AS) is a lightweight hose, used in applications where working pressures are low and where there is no need for the physical protection offered by an external braid. TO grade tube is vacuum resistant to -0.9bar up to 100˚C.

Note: *2½" & 3" TO cannot be ordered as an assembly.*

SS - Stainless Steel Braid

Purpose

Stainless Steel braided hose is the general purpose product, and can be used in applications involving high temperatures and working pressures. High tensile AISI 316 stainless steel wire is used, to give maximum pressure resistance and external protection to the hose.

PB - Polypropylene Braid

Purpose

Polypropylene braided hose is often preferred to SS in applications involving frequent handling and movement of the hose, and where temperatures are within the range -30˚C and +100˚C (-22˚F to +212˚F). PB braid is lighter in weight, and any broken strands will not cut the operator's hands. In addition, PB braid is not prone to "chloride stress corrosion", and has generally good chemical resistance.

To ensure Electrical Continuity (EC) between end fittings 2 strands of Monel wire earthing strips are criss-crossed on to the liner, underneath the Polypropylene Braid. These are folded back underneath the ferrule at both end fittings, to make an electrical contact.

Note: Prolonged exposure to sunlight eventually results in UV degradation of PB braid.

Note: Previously, Bioflex HB (Hastelloy Braid) and KYB (Kynar Braid) were available, particularly for chlorine applications. It has been found however, that customers prefer the Corroflon product for such applications - please refer to the Corroflon brochure.

Bioflex Ultra Rubber Covers

RC - Blue EPDM Rubber Covered

Purpose

For the most rugged applications where the hose may be subjected to rough treatment and severe external abrasion. Also for hygienic applications, where the external smoothness and cleanability of the hose is of prime importance.

Design

An SS braided hose assembly has a smooth finish, blue EPDM external rubber cover extruded over and vulcanised directly onto the braid. EPDM has excellent chemical resistance, and the hose has a temperature range from -40˚C, -40˚F up to +150˚C, +302˚F. Alternative colours of rubber, and strips with alternative text titles are available to special order.

Specifications

The Blue EPDM rubber cover has been tested and conforms to the requirements of USP Class VI.

Limitations

Rubber covers are only applicable to SS braided hose.

SI - Platinum Cured Silicone Rubber Cover

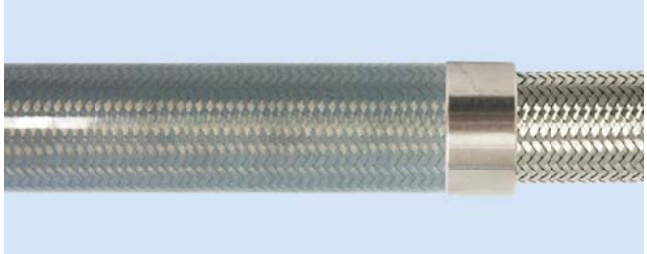

Purpose

As for RC hose, but where the hose may be required to withstand temperatures from -73˚C, -100˚F up to +204˚C, +400˚F. SI grade hose is semi-transparent, allowing visual monitoring of the braid.

Design

An SS braided hose assembly has a platinum cured silicone rubber cover extruded directly onto the braid, with a very smooth external surface finish to aid cleaning.

Specifications

The Silicone rubber cover has been tested and conforms to the requirements of USP Class VI.

BK - Black EPDM Rubber Covered

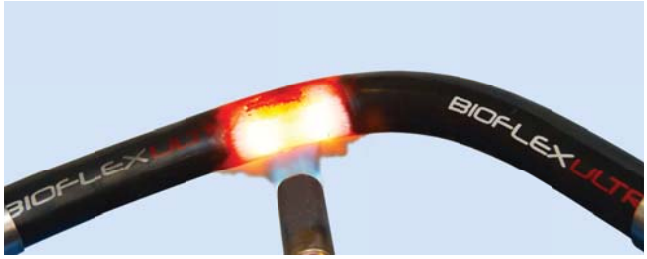

Purpose

Bioflex Ultra BK grade is designed to provide an alternative Rubber Cover which has the additional properties of making the hose Fireproof, and also making the rubber cover Anti-static.

Design

Bioflex Ultra BK grade hose is Fireproof to BS5173 Section103.13 Part 6.2 and 6.3. When end fittings are assembled to the hose, the assembly is Fire Resistant, but can be made Fireproof by adding DBK-300 rubber cover end protection. Bioflex Ultra BK meets the requirements of EN 16643 flame resistance.

Specifications

The Black EPDM Rubber Cover is anti-static in accordance with specification EN 16643 which specifies a resistance of 10^3 to 10^8 Ohms per hose assembly, and meets the requirements for 'Ω' marking.

Note: When in service at least one end fitting must be connected to Earth.

RC-300 - Rubber Covered 300mm Long End Protection

Purpose

In applications where excessive flexing of the hose at the end fitting occurs, it is sometimes necessary to 'stiffen' the hose in this area, to prevent kinking.

Design

A layer of rubber is applied and vulcanised directly to the ferrule, and 300mm (12 inch) along the hose from the fitting. This can be done either on an SS braided hose (RC-300) or on a rubber covered hose to form a 300mm (12 inch) long double layer of rubber at the end (DRC-300).

The rubber used is normally Blue EPDM, but if the hose is BK, or SI covered, then the same type and colour of rubber would be used (DBK-300 or DSI-300).

Limitations

Cannot be applied to PB braided hose. If required for a PB hose, consult Aflex Hose for an alternative "EPR" system. (EPR includes a 300mm (12 inch) length of loose rubber hose jubilee clipped to the ferrule).

Bioflex Ultra External Protection Systems

SG - Safegard Protection Sleeve

Purpose

To protect the hose against external abrasion and mechanical damage. For use in applications where maximum external protection is required with minimum extra hose weight. Particularly useful with PB hose, where a rubber cover is not an option.

Design

A lightweight black, HDPE (High Density Poly Ethylene) strip spirally wound around the outside of the hose over its whole length, secured to each end fitting by crimping under a SS ferrule.

Limitations

Safegard is applicable to all hose grades and all hose sizes from ½″ up to 2″.

Safegard is limited to use within a temperature range from -40˚C (-40˚F) up to +110˚C (230˚F). Internal fluid temperatures up to 140˚C (284˚F) are acceptable, when external temperatures are ambient.

The minimum hose assembly length must be doubled if Safegard is being used. The maximum assembly lengths for all sizes are capped at 20 metres (65 feet).

Other hose usage limitation specifications are not altered by the addition of Safegard.

Safegard is available with anti-static properties and complies with the requirements of a static-dissipative cover within EN 16643 (see page 13 for further information). Request details upon enquiry.

SR - Scuff Rings

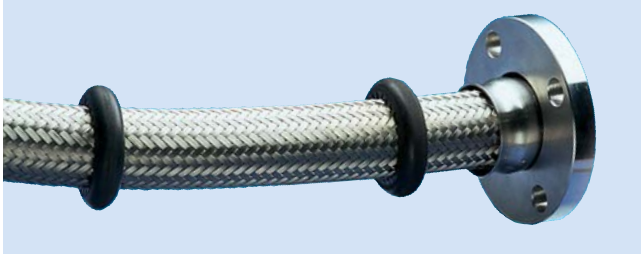

Purpose

For medium duty applications where the hose requires some protection against abrasion when dragged over the ground, but where a full rubber cover would be too heavy and cumbersome. Also for PB braided hose, which cannot be Rubber Covered.

Design

Specially moulded abrasion resistant rubber scuff rings are placed every half metre along the hose.

Limitations

Available for hose sizes 1″ (25mm) to 2″ (50mm) only. The operating temperature should not exceed 140˚C (284˚F) (internal).

PC - Protection Coil

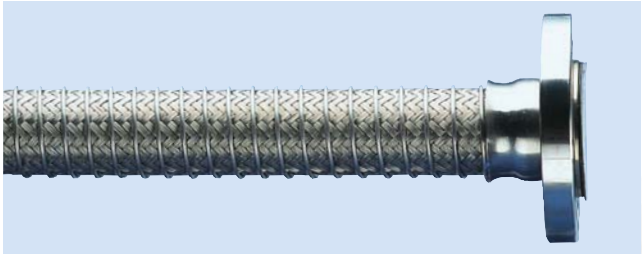

Purpose

For applications where the hose requires protection against abrasion when dragged over the ground, but where any rubber reinforcement is not permissible due to temperature, chemicals etc.

Design

A stainless steel wire helix is wound onto the braid and welded to the ferrules at each end.

Limitations

Available for all sizes and Grades of Bioflex Ultra Hose including rubber covered grades.

Maximum assembly lengths for all sizes are capped at 30 metres (100 feet).

Specifications

As for the relevant Hose Grade.

Bioflex Ultra Non-Lined Swivel Flange Fittings

Flange Specifications

- ANSI B16.5 (also ASME B16.5) Class 150# and 300#
- *DIN PN10, PN16 and PN40
- JIS 10K
- Other Pressure Ratings and Flange Specifications are also available.

  **DIN PN10, PN16 and PN40 Flanges all have the same dimensions, and so are fully interchangeable*

End Fitting Materials

- Flanges normally in Grade 304 SS, or Grade 316 SS if required
- Flange Retainers in Grade 316L SS
- Ferrules, most in Grade 304 SS, some sizes in Grade 316 SS

Alternative Options for Flange Component only:

- Zinc Plated Carbon Steel

Surface Finish :

- All surface finishes are to ASME BPE-SF-O (No finish required).
- If a specified finish on a particular surface is required, please state on the enquiry and order.

Maximum Pressure Ratings

- ANSI 150# = 16 Bar (230 psi),
  ANSI 300# = 41.4 Bar (600 psi)
- DIN PN10 = 10 Bar (145 psi),
  DIN PN16 = 16 Bar (230 psi)
- DIN PN40 = 40 Bar (580 psi)

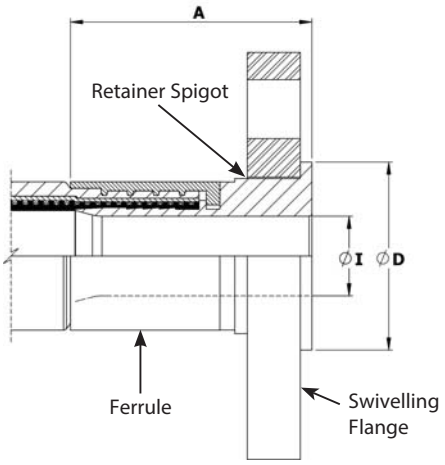

Nominal Hose Size		*Fitting Length A ASA150		Flared Diameter D ASA150		Fitting Inside Diameter I ASA150		Weight of Fitting		† 3A
in	mm	in	mm	in	mm	in	mm	Kg	Lbs	
1/2	13	1.67	42.50	1.38	35.00	0.37	9.40	0.57	1.25	-
3/4	20	1.86	47.24	1.69	42.90	0.62	15.75	0.84	1.84	√
1	25	2.36	60.00	2.00	50.80	0.85	21.50	1.20	2.63	√
1 1/4	32	2.67	67.72	2.50	63.50	1.03	26.21	1.59	3.50	√
1 1/2	40	2.75	69.86	2.87	73.00	1.25	31.75	2.15	4.73	√
2	50	3.20	81.22	3.62	92.00	1.76	44.60	2.92	6.41	√
2 1/2	65	3.70	94.00	4.13	105.00	2.25	57.15	4.36	9.59	√
3	80	3.74	95.00	5.00	127.00	2.63	66.7	6.02	13.24	√

Nominal Hose Size		*Fitting Length A PN10/16		Flared Diameter D PN10/16		Fitting Inside Diameter I PN10/16		Weight of Fitting		† 3A
in	mm	in	mm	in	mm	in	mm	Kg	Lbs	
1/2	13	1.79	45.50	1.77	45.00	0.37	9.40	0.78	1.72	-
3/4	20	2.11	53.50	2.28	58.00	0.62	15.75	1.12	2.47	√
1	25	2.44	62.00	2.68	68.00	1.12	28.50	1.43	3.15	√
1 1/4	32	2.70	68.50	3.07	78.00	1.03	26.21	2.35	5.17	√
1 1/2	40	2.91	74.00	3.49	88.00	1.70	43.10	2.76	6.06	√
2	50	3.50	89.00	4.02	102.00	2.15	54.50	3.62	7.96	√
2 1/2	65	3.62	92.00	4.80	122.00	2.25	57.15	4.58	10.07	√
3	80	3.74	95.00	5.43	138.00	2.63	66.70	6.03	13.26	√

**Fitting Lengths listed are for Bioflex Ultra RC, SI and BK hose grades. Shorter lengths apply for other hose grades.*
† 3A - Clean out of place (COP) only.

Bioflex Ultra Integral PTFE Lined Flange Fittings & 'Step-Up' Design

Flange Specifications

- ANSI B16.5 (also ASME B16.5) Class 150# and 300#
- *DIN PN10, PN16 and PN40
- JIS 10K
- Other Pressure Ratings and Flange Specifications are also available.

  **DIN PN10, PN16 and PN40 Flanges all have the same dimensions, and so are fully interchangeable*

Maximum Pressure Ratings for Flange Fittings

- ANSI 150# = 16 Bar (230 psi), ANSI 300# = 41.4 Bar (600 psi)
- DIN PN10 = 10 Bar (145 psi), DIN PN16 = 16 Bar (230 psi)
- DIN PN40 = 40 Bar (580 psi)

End Fitting Materials

- Flanges in Grade 304 SS
- Flange Retainers in Grade 316L SS
- Ferrules, most in Grade 304 SS, some sizes in Grade 316 SS

Alternative Options for Flange Component only:

- Zinc Plated Carbon Steel

90° Elbow Flange Fittings

- 90° Elbow Integral PTFE lined Flange Fittings are available for sizes 1", 1½" and 2" - see page 33.

Integral PTFE Lined Flange Fittings

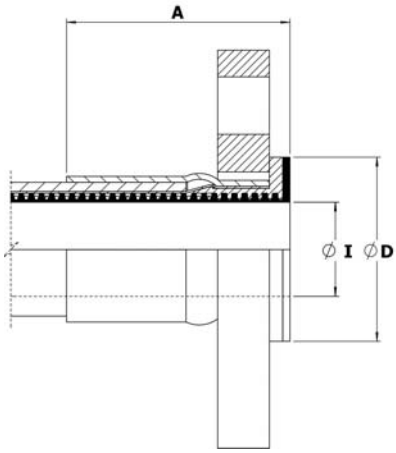

Nominal Hose Size		*Fitting Length A (Bioflex Ultra RC) ASA		*Fitting Length A (Bioflex Ultra RC) PN		Flared Diameter D				Fitting Inside Dia. & Hose Bore I		Recommended Bolt Tightening Torques		Weight of Fitting		† 3A
						ANSI 150#		DIN PN10/16								
in	mm	in	mm	in	mm	in	mm	in	mm	in	mm	ft.lbs	mtr.kgs	Kg	Lbs	
1/2	13	2.24	57.0	2.28	58	**1.25	**32	**1.25	**32	1/2	13.0	8	1.10	0.54	1.20	-
3/4	20	1.89	48.0	1.93	49	1.69	43	**1.97	**50	3/4	19.4	8	1.10	0.88	1.90	√
1	25	2.40	61.0	2.48	63	2.00	50	**2.50	**63	1	25.7	10	1.40	0.96	2.10	√
1 1/4	32	2.24	57.0	2.32	59	2.48	63	3.10	78	1 1/4	32.4	12	1.66	1.15	2.53	√
1 1/2	40	2.36	60.0	2.44	62	2.875	73	3.50	88	1 1/2	38.9	15	2.10	1.75	3.80	√
2	50	2.72	69.0	2.91	74	3.625	92	4.00	102	2	51.6	25	3.50	2.70	5.95	√
2 1/2	65	4.86	123.5	4.86	123.5	4.13	105	4.80	122	2 1/2	63.7	30	40.18	4.21	9.26	√
3	80	5.17	131.4	5.17	131.4	5.00	127	**5.00	**127	3	76.8	40	53.94	4.75	10.44	√

** Fitting Lengths listed are for Bioflex Ultra RC, SI and BK hose grades. Shorter lengths apply for other hose grades.*
*** The listed Flare Diameters are not full size due to limitations on PTFE flare diameters.*
† 3A - Clean out of place (COP) only. For more information on 3A fittings see page 34

'Step-Up' PTFE Lined Flange Fitting Design for Bioflex Ultra Hose

Because Bioflex Ultra Hose has better flow rates than some larger bore sizes of Convoluted PTFE hose, it represents a superior alternative when fitted with the larger size flanges in some applications.

It is, however, necessary to also "Step-Up" the PTFE-lined bore, to ensure a diameter match with the mating connector.

This is best achieved using a solid PTFE Adaptor Plate, as shown in the drawing.

Example: a 2" hose to 3" ANSI 150# PTFE Lined Flange Joint >

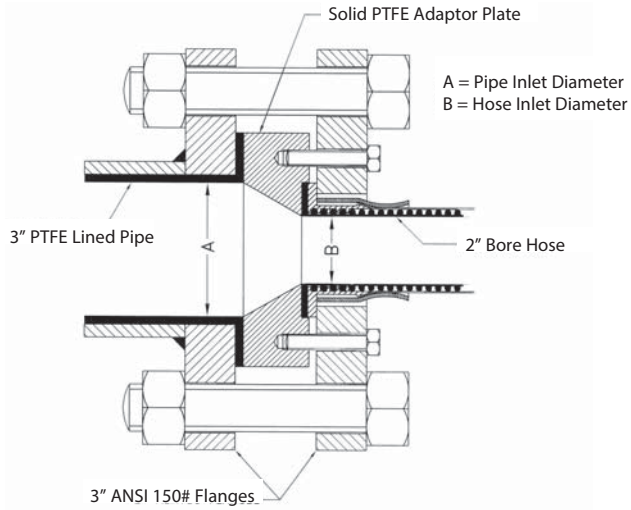

Bioflex Ultra Female Cam & Groove Fittings
PTFE Lined & Non-Lined

End Fitting Specifications

- Generally in accordance with A-A-59326 (replaces MIL-C-27487) and EN14420-1 (replaces DIN 2828), and all are fully interchangeable.

End Fitting Materials

- Spigot in Grade 316L SS
- Body in Grade 316C SS
- Ferrules, most in Grade 304 SS, some sizes in Grade 316L SS
- Standard Gasket is Buna N (Nitrile) Rubber.
- FEP encapsulated Silicone Rubber Gaskets also available.

Surface Finish: (Non-Lined Fittings only)

- All surface finishes are to ASME BPE-SF-O (No finish required).
- If a specified finish on a particular surface is required, please state on the enquiry and order.

Temperature and Pressure Ratings

- When used with a Buna N Gasket all sizes up to 16 Bar (230 psi) and up to a maximum temperature of 65˚C (149˚F)
- When used with FEP, Fluoro Rubber or other encapsulated gaskets all sizes up to 10 Bar (145 psi) and up to a maximum temperature of 204˚C (400˚F).

90˚Elbow Cam & Groove Fittings (PTFE Lined Only)

- 90˚ Elbow Integral PTFE lined Cam & Groove Fittings are available for sizes 1", 1½" and 2" - see page 33.

Notes: For Integral PTFE Lined Fittings Only

- FEP Gaskets require higher clamping forces to flatten the Seal and make the joint. This is made easier by "pre-setting" these gaskets by clamping Polypropylene Cam Male Inserts to the assembled fittings, which must then be kept in place during storage, until use.
- Any Customer's Own "Special" Gaskets must be pre-supplied to Aflex for special assembly and testing of hose assemblies, to ensure suitability.

Swivelling, Locking Arm Female Cam and Groove Fittings - Non-Lined

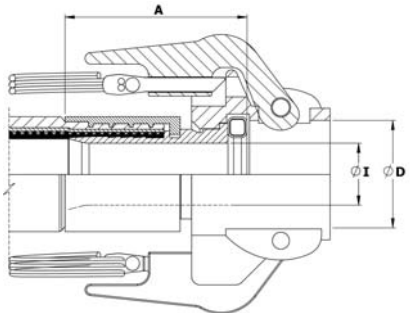

Nominal Hose Size		*Fitting Length A (RC)		Cam Sleeve Inside Diameter D		Fitting Inside Diameter I		Weight of Fitting	
in	mm	in	mm	in	mm	in	mm	Kg	Lbs
¾	20	2.10	53.00	1.26	32.0	0.62	15.75	0.58	1.28
1	25	2.32	59.00	1.45	37.0	0.85	21.50	0.72	1.58
1 ¼	32	2.54	64.60	1.81	46.0	1.03	26.21	1.10	2.42
1 ½	40	2.65	67.20	2.12	54.0	1.25	31.75	1.21	2.66
2	50	3.11	79.00	2.52	64.0	1.76	44.60	1.48	3.26
2½	65	2.99	76.00	3.01	76.5	2.25	57.15	1.42	3.12
3	80	2.80	71.00	3.63	92.2	2.63	66.70	1.88	4.14

Fixed or Swivelling, Locking Arm Female Cam and Groove Fitting - Integral PTFE Lined

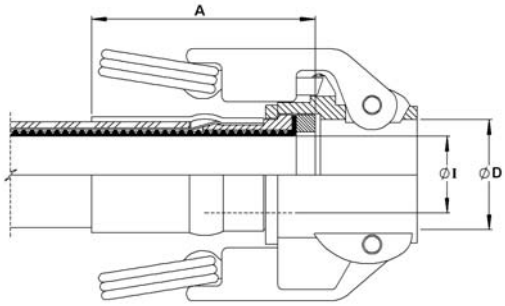

Nominal Hose Size		*Fitting Length A (RC)		Cam Sleeve Inside Dia. D		Fitting Inside Diameter I		Weight of Fitting	
in	mm	in	mm	in	mm	in	mm	Kg	Lbs
¾	20	2.155	54.75	1.260	32.0	0.76	19.4	0.42	0.93
1	25	2.716	69.00	1.456	37.0	1.01	25.7	0.59	1.30
1 ¼	32	2.560	65.50	1.810	46.0	1.26	32.0	0.98	2.16
1 ½	40	2.612	66.35	2.126	54.0	1.53	38.9	1.15	2.50
2	50	2.966	75.35	2.520	64.0	2.03	51.6	1.40	3.08
** 2½	65	5.310	135.0	3.010	76.5	2.36	60.0	1.17	2.57
** 3	80	5.450	138.4	3.630	92.2	2.87	73.0	1.40	3.07

** Fitting Lengths listed are for Bioflex Ultra RC, SI and BK hose grades. Shorter lengths apply for other hose grades.*
*** PTFE lined 2½" and 3" sizes are fixed only*

Bioflex Ultra Male Cam & Groove Fittings
and PTFE Lined Flange Adaptors

End Fitting Specifications

- Generally in accordance with A-A-59326 (replaces MIL-C-27487) and EN14420-1 (replaces DIN 2828), and all are fully interchangeable.

End Fitting Materials

- Fittings in Grade 316L SS
- Ferrules, most in Grade 304 SS, some sizes in Grade 316L SS
- Adaptor Flange Only in Grade 304 SS

Surface Finish: (Non-Lined Fittings only)

- All surface finishes are to ASME BPE-SF-O (No finish required).
- If a specified finish on a particular surface is required, please state on the enquiry and order.

Temperature and Pressure Ratings

- Temperature and pressure determined by the type of gasket in the Female connecting component and the hose grade.

Non-Lined Cam & Groove Male Fitting

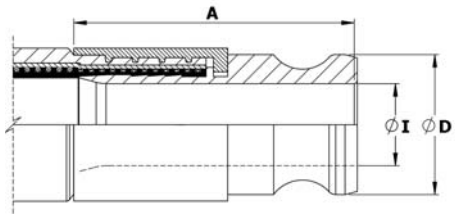

Integral PTFE Lined Cam & Groove Male Fitting

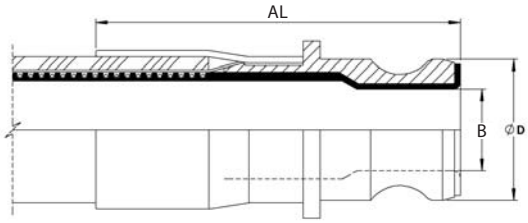

Nominal Hose Size		Outside Diameter D		*Non-Lined Fitting Length A		Non-Lined Inside Diameter I		*PTFE Lined Fitting Length AL		PTFE Lined Inside Diameter B		Weight of Fitting	
in	mm	in	mm	in	mm	in	mm	in	mm	in	mm	Kg	Lbs
3/4	20	1.260	32.0	2.44	62.0	0.62	15.8	2.82	71.58	0.71	18.13	0.35	0.77
1	25	1.456	37.0	2.95	75.0	0.85	21.5	3.74	95	0.81	20.61	0.45	0.99
1 1/4	32	1.790	45.5	3.34	85.0	1.03	26.2	3.62	92	0.97	24.8	0.45	1.09
1 1/2	40	2.106	53.5	3.74	95.0	1.25	31.8	3.98	101	1.35	34.40	0.84	1.85
2	50	2.480	63.0	4.33	110.0	1.76	44.6	4.61	117	1.72	43.75	1.10	2.42
2 1/2	65	2.980	75.8	4.13	105.0	2.23	56.6	6.50	165	2.17	55.0	1.17	2.57
3	80	3.600	91.5	4.76	120.8	2.87	73.0	6.98	177.4	2.84	72.2	1.45	3.20

**Fitting Lengths listed are for Bioflex Ultra RC, SI and BK hose grades. Shorter lengths apply for other hose grades.*

PTFE Lined Male Cam & Groove X Flange Adaptors

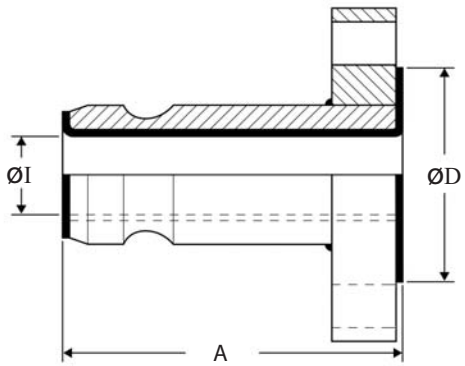

Cam Action Adaptor Size		Flange Size &Specification	ØD		A		ØI		Weight of Fitting	
in	mm		in	mm	in	mm	in	mm	Kg	Lbs
1	25	1" ANSI 150	2.00	50	4 1/8	105	0.84	21	1.246	2.75
1	25	DN25/PN16	2.58	64	4 1/8	105	0.84	21	1.538	3.39
1 1/2	40	1 1/2" ANSI 150	2.87	73	4 3/8	118	1.35	34	2.228	4.92
1 1/2	40	DN40/PN16	3.47	88	4 3/8	118	1.35	34	2.753	6.07
2	50	2" ANSI 150	3.63	92	4 3/8	118	1.69	43	3.359	7.40
2	50	DN50/PN16	4.00	102	4 3/8	118	1.69	43	3.714	8.19

Note: *Other Flange Specifications and Pressure Ratings are also available. Non-Lined adaptors and Female Cam & Groove X Flange Adaptors are also available, to special order.*

Bioflex Ultra Sanitary Triclamp (Triclover) Fittings
PTFE Lined, Flared and Hot Formed

Introduction

Advantages are - unrestricted clean flow of fluids, no fluid entrapment areas, and all PTFE wetted surfaces internally. Available as standard, stocked fittings in the listed sizes, or in other sizes to special order

End Fitting Specifications

- ASME BPE
- DIN32676
- BS4825 Pt 3 - equivalent to ASME BPE
- ISO 1127

Note: *The inside lip of the Aflex flared face design is hot formed to a square edge. This prevents a gap for fluid entrapment between the rubber seal and the sealing face. Other suppliers designs have rounded edges, which opens a gap for fluid entrapment.*

End Fitting Materials

- Fittings in Grade 316L SS (= BS 316 S11 = EN 1.4404)
- Ferrules, most in Grade 304 SS, some sizes in Grade 316L SS

Temperature and Pressure Ratings

- Pressures up to 16 Bar (230 psi)
- Temperatures upto 120˚C (250˚F) with EPDM Gaskets
- Temperatures up to 180˚C (356˚F) with PTFE, Silicone or Viton Gaskets
- Higher Pressures & Temperatures possible with Special Clamps and appropriate Seals.

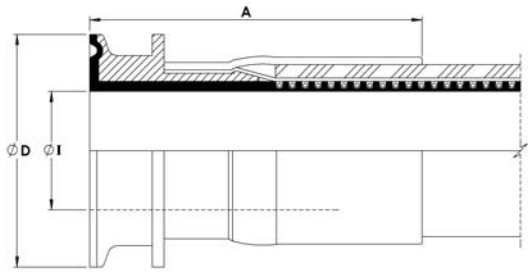

'Beaded' Triclover Fittings

This fitting design is available to special order. No separate seal is required for this design , eliminating any seal compatibility problems.

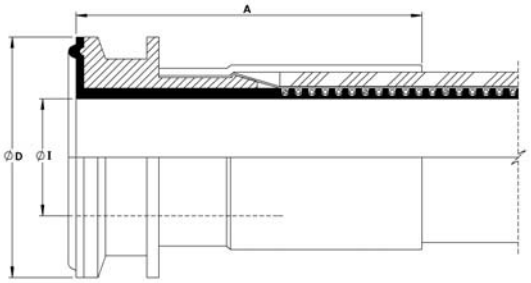

	Nominal Hose Size	Flange Diameter D		Outlet Diameter I		*Fitting Length A		3A
	in	in	mm	in	mm	in	mm	
Mini-Sanitary Triclamp Fittings	** 3/8	0.984	25.0	3/8	9.5	2.2	56	√
	** 1/2	0.984	25.0	3/8	9.5	2.3	60	√
Sanitary Triclamp Fittings	** 5/8 (DN15)	1.340	34.0	5/8	16.0	3.0	77	√
	3/4 (DN20)	1.340	34.0	0.790	20.0	3.0	77	√
	3/4	1.984	50.5	3/4	19.0	2.6	65	√
	7/8	1.984	50.5	7/8	22.2	2.6	65	√
	1	1.984	50.5	1.024	26.0	2.6	65	√
	1 3/8	1.984	50.5	1 3/8	34.9	2.8	72	√
	1 1/2	1.984	50.5	1 3/8	34.9	3.2	80	√
	1 7/8	2.516	64.0	1 7/8	47.6	3.3	84	√
	2	2.516	64.0	1 7/8	47.6	3.6	91	√
	2 1/2	3.050	77.5	2 3/8	60.2	5.3	135	√
	3	3.580	91.0	2 7/8	72.9	5.6	142	√

* *Fitting Lengths listed are for Bioflex Ultra RC, SI and BK hose grades. Shorter lengths apply for other hose grades.*

** *3A - For assemblies with nominal hose bore under 0.75", the maximum assembly length is 457mm (18in) and can only be supplied specifically for 3-A Standard 17 - and - 23- compliant filling and packaging machine applications. For more information on 3A fittings see page 34.*

Note: *The 7/8", 1 3/8" and 1 7/8" hose sizes can only be supplied as assemblies with lined Sanitary Triclover (or I-Line fittings) at BOTH ends, because other types of fittings (Flange, Camlocks etc) are not available for these sizes of hose.*

Bioflex Ultra Sanitary Triclamp (Triclover) Fittings
Not PTFE Lined

Introduction

There are many different specifications, dimensions and surface finishes for triclamp fittings. Those listed below are the popular fittings, which are stocked as standard fittings by Aflex.

All the alternative fittings can be supplied to special order if the following information can be given;

- Flange diameter D and Outlet diameter I
- Hose size if known, or Aflex can recommend a hose size to suit
- The internal Surface Finish, if it is required to be better than the ASME BPE SF3 surface finish of <0.76µm.Ra = <30µ in Ra non-electropolished.
- Standard (see below) if known.

Standards

- ASME BPE
- DIN 32676 (types A, B and C are available)
- BS 4825 Pt.3 (equivalent to ASME BPE)
- ISO 1127

End Fitting Materials

- Fittings in AISI 316L = EN 1.4404 = BS 316 S11
- Ferrules, most in Grade 304 SS, some sizes in Grade 316L SS
- Fittings for DIN32676 are available in 1.4435 (316L)
- Fittings in 1.4571, Hastelloy, Monel, PVDF and other materials to special order

Temperature and Pressure Ratings

- Pressures up to 16 Bar (230 psi)
- Temperatures up to 120˚C (250˚F) with EPDM Gaskets
- Temperatures up to 180˚C (356˚F) with PTFE, Silicone or Viton Gaskets
- Higher Pressures and Temperatures with Special Clamps and Gaskets.

Internal Surface Finish Specifications

- ASME BPE SF3 (mechanical polish, not electropolished) Surface Finish, Maximum reading: <0.76µm Ra = <30µ in. Ra
- ASME BPE SF4 (mechanical polish and electropolished) Surface Finish, Maximum reading: <0.375µm Ra = <15µ in. Ra (SF4 is the highest level of surface finish specified in ASME BPE, and the standard, stocked fittings listed are all to this finish).
- DIN 32676 H4 (mechanical polish, not electropolished) Surface Finish, Average reading :<0.4µm Ra = <16µ in. RA If the standard SF4 finish is not acceptable, H4 must be requested on the enquiry/order.

Note: *ASME BPE Triclamp suppliers often quote an 'Average' of surface finish reading only, for example 'average 15 Ra or better', but this is not in accordance with the stricter ASME BPE requirement that a 'Maximum' for individual readings should be complied with.*

	Nominal Hose Size	Flange Diameter D		Outlet Diameter I		*Fitting Length A		Specifications		3A Sanitary
	in	in	mm	in	mm	in	mm	ASME BPE	DIN 32676	
Mini-Sanitary Triclamp Fittings	1/4	0.984	25.0	0.172	4.37	1.3	33	-SF4	-	-
	1/4	0.984	25.0	3/8	9.53	1.3	33	-SF4	Type C	-
	3/8	0.984	25.0	0.305	7.75	1.7	42	-SF4	-	-
	3/8	0.984	25.0	3/8	9.53	1.7	42	-SF4	Type C	-
	1/2	0.984	25.0	5/8	15.88	1.7	44	-SF4	Type C	-
	1/2	0.984	25.0	3/8	9.5	1.7	44	-SF4	Type C	-
	3/4	0.984	25.0	5/8	15.85	2.0	50	-SF4	Type C	√
Sanitary Triclamp Fittings	3/4	1.340	34.0	5/8	15.88	2.0	50	-SF4	Type C	√
	3/4	1.340	34.0	0.630	16.0	2.0	50	-	Type A	√
	1/2	1.984	50.5	7/8	22.2	1.7	44	-SF4	Type C	-
	1/2	1.984	50.5	1 3/8	34.8	1.7	44	-SF4	Type C	-
	3/4	1.984	50.5	0.713	18.1	1.8	45	ISO1127	Type B	√
	3/4	1.984	50.5	7/8	22.1	1.8	45	-SF4	Type C	√
	3/4	1.984	50.5	5/8	15.88	1.8	45	-SF4	Type C	√
	1	1.984	50.5	7/8	22.2	2.3	58	-SF4	Type C	√
	1	1.984	50.5	1 3/8	34.8	2.3	58	-SF4	Type C	√
	1 1/2	1.984	50.5	1 3/8	34.8	2.6	67	-SF4	Type C	√
	1 1/2	2.516	64.0	1 7/8	47.6	2.6	67	-SF4	Type C	√
	2	2.516	64.0	1 7/8	47.6	3.1	78	-SF4	Type C	√
	2 1/2	3.05	77.5	2.37	60.2	2.80	71	-SF4	Type C	√
	3	3.58	91	2.87	72.9	3.17	80.4	-SF4	Type C	√

**Fitting Lengths listed are for Bioflex Ultra RC, SI and BK hose grades. Shorter lengths apply for other hose grades.*

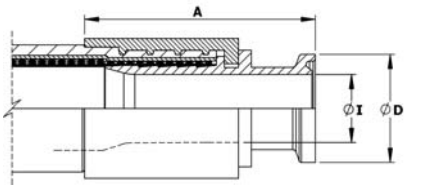

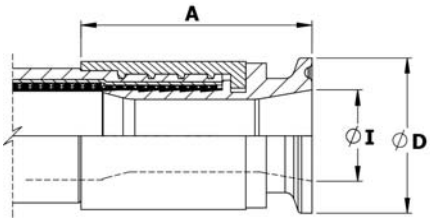

Mini-Sanitary Triclamp Fittings

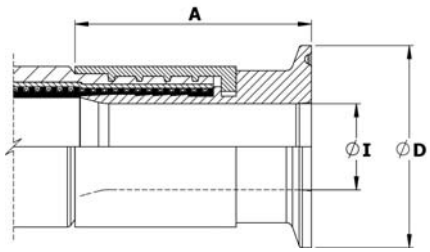

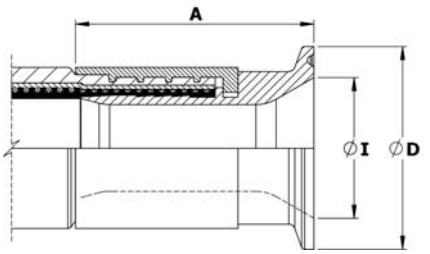

Sanitary Triclamp Fittings

Bioflex Ultra Sanitary Triclamp (Triclover) Fittings - 90° Elbow
Not PTFE Lined

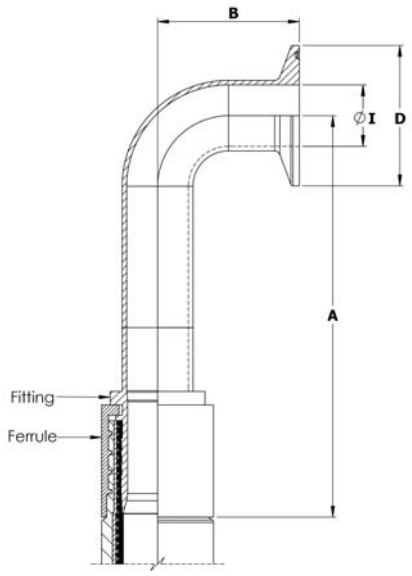

End Fitting Specifications

- BS4825 Pt 3
- ASME-BPE-a
- Others to Special Order

End Fitting Materials

- Fittings in Grade AISI 316L = EN 1.4404 = BS 316 S11
- Ferrules, most in Grade 304 SS, some sizes in Grade 316L SS

Surface Finish :

- The internal surface is to ASME BPE-SF-3 (<0.76 µm Ra, not electropolished).
- If a specified finish on a particular surface is required, please state on the enquiry and order.

Outlet Diameters

The outlet diameters as listed are in accordance with BS4825. The ASME specification, however, requires these diameters to be 0.005" (0.125mm) less in each case. An Outlet Diameter tolerance of +0.000 -0.005" has therefore been applied, so that the same fitting satisfies requirements of both specifications.

Temperature and Pressure Ratings

- Pressures up to 16 Bar (230 psi)
- Temperatures up to 120˚C (250˚F) with EPDM Gaskets
- Temperatures up to 180˚C (356˚F) with PTFE, Silicone or Viton Gaskets
- Higher Pressures and Temperatures with Special Clamps and Gaskets.

Nominal Hose Size		*Centre Line to Fitting End A (RC)		Centre Line to Face B		Flange Diameter D		Outlet Diameter I		Weight of Fitting	
in	mm	in	mm	in	mm	in	mm	in	mm	Kg	Lbs
1/2	13	5.12	130.0	1.60	41.0	0.98	25.0	3/8	9.5	0.09	0.21
3/4	20	5.26	133.5	1.60	41.0	0.98	25.0	5/8	16.0	0.14	0.30
1	25	5.64	143.2	2.00	51.0	1.98	50.5	7/8	22.2	0.26	0.58
1 1/2	40	6.69	170.0	2.75	70.0	1.98	50.5	1 3/8	34.9	0.45	1.00
2	50	8.10	205.7	3.50	88.9	2.16	64.0	1 7/8	47.6	0.75	1.65
2 1/2	65	7.32	186.0	4.25	108.0	3.05	77.5	2.37	60.2	1.48	3.25
3	80	10.43	265.0	5.00	127.0	3.58	91.0	2.87	72.9	1.99	4.38

**Fitting Lengths listed are for Bioflex Ultra RC, SI and BK hose grades. Shorter lengths apply for other hose grades.*

Bioflex Ultra DIN11851 Male & Female Fittings
Non-Lined

Specifications
- Generally to German DIN 11851 specifications.

Temperature &Pressure Ratings
- Sizes up to 1½" MWP = 40 Bar (580 psi) up to 140˚C (284˚F)
- Sizes 2" to 3" MWP = 25 Bar (360 psi) up to 140˚C (284˚F)

Except: where the applicable hose pressure/temperature ratings are lower (page 7).

End Fitting Materials
- Spigots in Grade 316L SS (Non-Lined Spigot in 1.4571)
- Nuts in Grade 304 SS
- Ferrules, most in Grade 304 SS, some sizes in Grade 316L SS

Surface Finish: (Non-Lined Fittings only)
- All surface finishes are to ASME BPE-SF-3>0.76µm Ra, mechanical polish.
- If a specified finish on a particular surface is required, please state on the enquiry and order.

Non-Lined DIN11851 Female Fitting

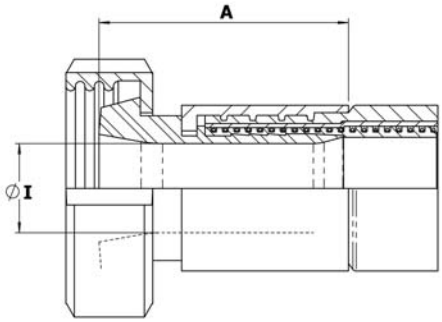

Non-Lined DIN11851 Male Fitting

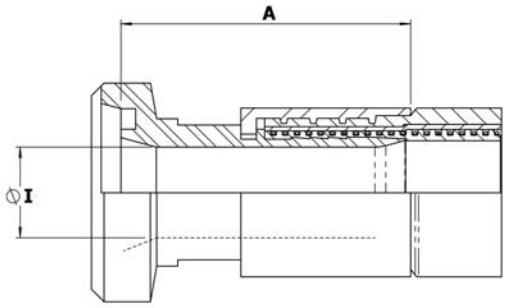

Nominal Hose Size = 'I' Dia		*Male Fitting Length A (Bioflex Ultra RC)		*Female Fitting Length A (Bioflex Ultra RC)		Fitting Inside Diameter		Weight of Fitting Male		Weight of Fitting Female		† 3A
in	mm	in	mm	in	mm	in	mm	Kg	Lbs	Kg	Lbs	
½	15	1.82	46	1.63	41.5	0.37	9.4	0.14	0.30	0.20	0.44	-
¾	20	2.05	52	1.87	47.5	0.62	15.8	0.28	0.62	0.34	0.76	√
1	25	2.68	68	2.33	59.2	0.85	21.5	0.40	0.87	0.49	1.08	√
1¼	32	2.48	63	2.58	65.5	1.03	26.2	0.55	1.21	0.64	1.40	√
1½	40	2.84	72	2.76	70.0	1.25	31.8	0.76	1.68	0.85	1.86	√
2	50	3.23	82	3.23	82.0	1.76	44.6	0.92	2.04	1.20	2.04	√
2½	65	3.23	82	3.03	77.0	2.25	57.15	1.27	2.79	1.59	3.50	√
3	80	3.23	82	2.97	75.5	2.63	66.7	1.62	3.56	2.04	4.49	√

† 3A approved for CIP when used with approved gaskets.

Bioflex Ultra DIN11851 Male & Female Fittings
PTFE Lined

Description

DIN11851 male and female fittings, integral PTFE lined and flared. The PTFE sealing face is hot moulded into the correct shape, designed to achieve the optimum pressure seal. 90˚ elbow PTFE lined fittings are available for some sizes and grades - see page 33.

Specifications

- Generally to German DIN 11851 specifications.

Note: The PTFE lined male fitting is designed to be used without a rubber seal. Please note that when connecting to a PTFE Lined DIN 11851 Male, extra spanner tightening of the nut is sometimes required in order to provide a leak free connection.

End Fitting Materials

- Spigots in Grade 316L SS (Non-Lined Spigot in 1.4571)
- Nuts in Grade 304 SS
- Ferrules, most in Grade 304 SS, some sizes in Grade 316L SS

Temperature &Pressure Ratings

- Sizes up to 1½" MWP = 40 Bar (580 psi) up to 140˚C (284˚F)
- Sizes 2" to 3" MWP = 25 Bar (360 psi) up to 140˚C (284˚F)

Except: where the applicable hose pressure/temperature ratings are lower (page 7).

PTFE Lined DIN11851 Female Fitting

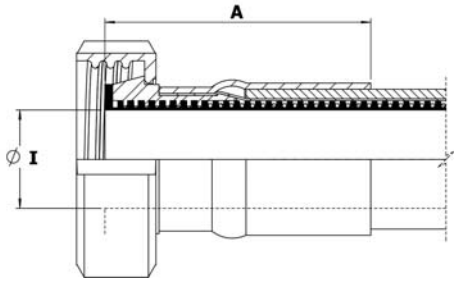

PTFE Lined DIN11851 Male Fitting

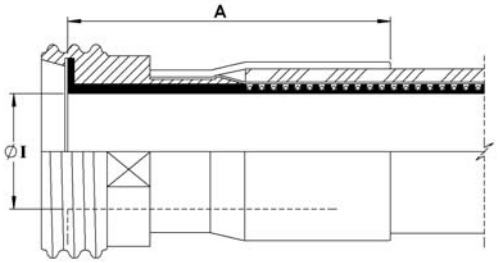

Nominal Hose Size = 'I' Dia		*Male Fitting Length A (Bioflex Ultra RC)		*Female Fitting Length A (Bioflex Ultra RC)		Fitting Inside Diameter		Weight of Fitting Male		Weight of Fitting Female		† 3A
in	mm	in	mm	in	mm	in	mm	Kg	Lbs	Kg	Lbs	
** 1/2	15	2.28	58	2.00	51	0.51	13.0	0.13	0.29	0.17	0.37	√
3/4	20	2.44	62	2.17	55	0.76	19.4	0.21	0.46	0.23	0.51	√
1	25	3.00	76	2.75	70	1.01	25.7	0.30	0.66	0.40	0.88	√
1¼	32	2.75	70	2.50	64	1.28	32.4	0.37	0.82	0.51	1.12	√
1½	40	2.84	72	3.00	76	1.53	38.9	0.42	0.93	0.73	1.60	√
2	50	3.47	88	3.55	90	2.03	51.6	0.65	1.43	1.10	2.42	√
2½	65	5.91	150	5.20	132	2.51	63.7	1.50	3.29	1.42	3.12	√
3	80	6.38	162	5.51	140	3.02	76.8	1.90	4.19	1.82	4.01	√

** Fitting Lengths listed are for Bioflex Ultra RC, SI and BK hose grades. Shorter lengths apply for other hose grades.*
*** 3A - For assemblies with nominal hose bore under 0.75", the maximum assembly length is 457mm (18in) and can only be supplied specifically for 3-A Standard 17- and 23- compliant filing and packaging machine applications.*
† 3A - Clean out of place (COP) only.

Bioflex Ultra SMS Female Fittings - PTFE Lined and RJT Female Fitting - Non Lined

End Fitting Specifications

- SMS generally to Swedish SMS1148 specification.
- RJT generally to British BS4825 Pt 5 specification.

End Fitting Materials

- Spigots in Grade 316L SS
- Nuts in Grade 304 SS
- Ferrules, most in Grade 304 SS, some sizes in Grade 316L SS

Surface Finish: (Non-Lined Fittings only)

- All surface finishes are to ASME BPE-SF-O (No finish required).
- If a specified finish on a particular surface is required, please state on the enquiry and order.

Temperature and Pressure Ratings

- Pressures up to 10 Bar (150 psi)
- Temperatures up to 150˚C (302˚F).

90˚Elbows

- PTFE Lined 90° Elbow Fittings are available for some sizes and grades - see page 33.

PTFE Lined SMS Female Fitting

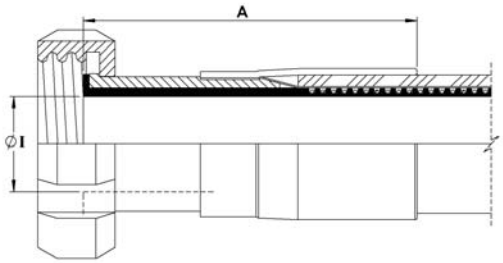

Nominal Hose Size		*Fitting Length A (Bioflex Ultra RC)		Fitting Inside Diameter I		Weight of Fitting		† 3A
in	mm	in	mm	in	mm	Kg	Lbs	
1	25	3.39	86	1	25.7	0.40	0.88	√
1¼	32	3.39	86	1¼	32.4	0.51	1.12	√
1½	40	3.70	94	1½	38.9	0.73	1.60	√
2	50	4.10	104	2	51.6	1.10	2.42	√
2½	65	6.38	162	2½	63.7	1.78	3.92	√
3	80	6.85	174	3	76.8	2.15	4.73	√

**Fitting Lengths listed are for Bioflex Ultra RC, SI and BK hose grades. Shorter lengths apply for other hose grades.*
† 3A - Clean out of place (COP) only. For more information on 3A fittings see page 34.

RJT Female Fitting, Non-Lined

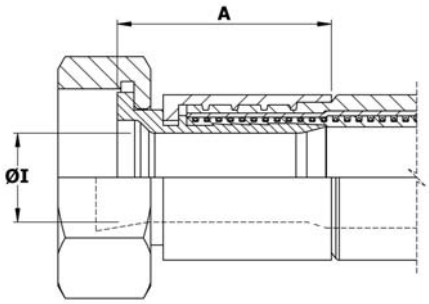

Nominal Hose Size		*Fitting Length A (Bioflex Ultra RC)		Fitting Inside Diameter I		Weight of Fitting	
in	mm	in	mm	in	mm	Kg	Lbs
1	25	2.04	52	0.85	21.50	0.40	0.88
1½	40	2.44	62	1.25	31.75	0.75	1.65
2	50	2.83	72	1.75	44.45	1.02	2.48

**Fitting Lengths listed are for Bioflex Ultra RC, SI and BK hose grades. Shorter lengths apply for other hose grades.*

Bioflex Ultra NPT & BSPT Fixed Male and NPT Fixed Female Fittings

End Fitting Specifications

- NPT Taper Threads to American National Standard Pipe Taper Thread design to ANSI/AMSE B1.20.1.
- BSPT Threads to British Standard Pipe Taper Thread design to BS21

Alternatives - Parallel Threads, Metric Threads and Others.

End Fitting Materials

- Fittings in Grade 316L SS
- Ferrules, most in Grade 304 SS, some sizes in Grade 316L SS
- Available in other materials to special order

Alternatives - Hydraulic design BSPT Male Fittings in Zinc Plated Carbon Steel, to special order.

Surface Finish :

- All surface finishes are to ASME BPE-SF-O (No finish required).
- If a specified finish on a particular surface is required, please state on the enquiry and order.

Fixed Male NPT or BSPT

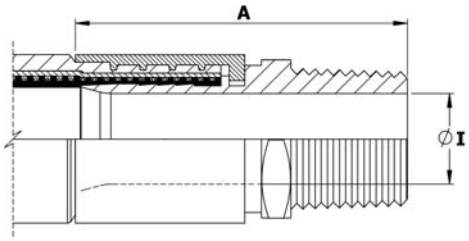

Nominal Hose Size		NPT or BSPT Thread Size	*Fitting Length A (Bioflex Ultra RC)		Fitting Inside Diameter I		Weight of Fitting	
in	mm	in	in	mm	in	mm	Kg	Lbs
1/2	13	1/2	2.40	61	0.37	9.40	0.14	0.30
3/4	20	3/4	2.68	68	0.62	15.75	0.25	0.54
1	25	1	3.07	78	0.85	21.50	0.33	0.73
1 1/4	32	1 1/4	3.58	91	1.03	26.21	0.61	1.34
1 1/2	40	1 1/2	3.82	97	1.25	31.75	0.81	1.78
2	50	2	4.57	116	1.76	44.60	1.17	2.58
2 1/2	65	2 1/2	5.31	135	2.25	57.15	1.84	4.04
3	80	3	5.39	137	2.63	66.7	2.49	5.47

Fixed Female NPT

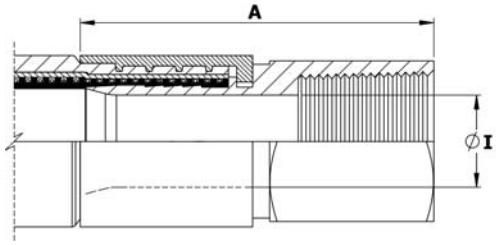

Nominal Hose Size		NPT Thread Size	*Fitting Length A		Fitting Inside Diameter I		Weight of Fitting	
in	mm	in	in	mm	in	mm	Kg	Lbs
1/2	13	1/2	2.40	61	0.37	9.40	0.18	0.39
3/4	20	3/4	2.52	64	0.62	15.75	0.24	0.54
1	25	1	3.23	82	0.85	21.50	0.37	0.81
1 1/2	40	1 1/2	3.62	92	1.25	31.75	0.83	1.82
2	50	2	4.13	105	1.76	44.60	1.24	2.72

**Fitting Lengths listed are for Bioflex Ultra RC, SI and BK hose grades. Shorter lengths apply for other hose grades.*

Bioflex Ultra BSP 60° Cone Seat Female Unions and BSP Flat Face Lug Nut Female Fittings

End Fitting Specifications

- BSPP Threads to British Standard Pipe Parallel Thread design to BS21, 60˚ Cone Seat design, or Flat Seat.

Alternatives :

- Cone Seat Female Union Fittings can be supplied with a BSPP BSPT Taper Male Adaptor if required.

End Fitting Materials

- Spigots in Grade 316L SS
- Nuts in Grade 316L SS
- Ferrules, most in Grade 304 SS, some sizes in Grade 316L SS

Alternatives:

- Hydraulic design Cone Seat Female Unions can be supplied in Zinc Plated Carbon Steel to special order.
- Lug Nuts can be supplied in Gun Metal (Bronze) if required.

Surface Finish :

- All surface finishes are to ASME BPE-SF-O (No finish required).
- If a specified finish on a particular surface is required, please state on the enquiry and order.

BSP 60° Cone Seat Female Union Fitting

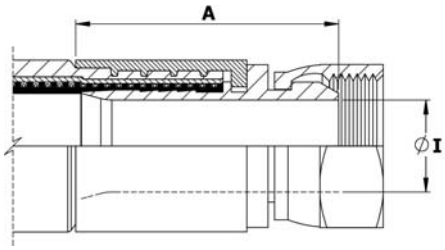

Nominal Hose Size		NPT or BSPT Thread Size	*Fitting Length A (Bioflex Ultra RC)		Fitting Inside Diameter I		Weight of Fitting	
in	mm	in	in	mm	in	mm	Kg	Lbs
1/2	13	1/2	1.46	37	0.37	9.40	0.09	0.21
3/4	20	3/4	1.89	48	0.62	15.75	0.20	0.44
1	25	1	2.17	55	0.85	21.50	0.33	0.72
1 1/4	32	1 1/4	2.48	63	1.03	26.21	0.49	1.07
1 1/2	40	1 1/2	2.87	73	1.25	31.75	0.79	1.73
2	50	2	2.91	74	1.76	44.60	1.07	2.36
2 1/2	65	2 1/2	3.15	80	2.25	57.15	1.37	3.02
3	80	3	3.21	81.5	2.63	66.7	2.10	4.62

BSP Flat Face Lug Nut Female Fitting

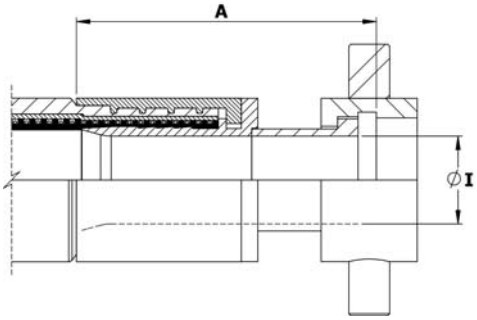

Nominal Hose Size		BSPP Thread Size	*Fitting Length A (Bioflex Ultra RC)		Fitting Bore Diameter I		Weight of Fitting	
in	mm	in	in	mm	in	mm	Kg	Lbs
1	25	1	2.67	68	0.85	21.50	0.23	0.51
1 1/2	40	1 1/2	3.94	100	1.25	31.75	0.55	1.21
2	50	2	4.33	110	1.75	44.60	0.77	1.69

**Fitting Lengths listed are for Bioflex Ultra RC, SI and BK hose grades. Shorter lengths apply for other hose grades.*

Bioflex Ultra 37° JIC Female Fittings
and Male & Female NPT Unions

End Fitting Specifications

- SAE J514 37˚ Flare JIC Female Fitting
- 37˚ JIC Male-to-NPT Male/Female Adaptors
- NPT Threads to ANSI/AMSE B1.20.1

Temperature and Pressure Ratings

- Same Maximum Working Pressure and Temperature as for the relevant size of Bioflex Ultra Hose, on page 7.

Note:

- Not usable with SAE 45˚ Flare fittings which have the same thread.

End Fitting Materials

- Spigots in Grade 316L SS
- Nuts in 316L SS
- Ferrules, most in Grade 304 SS, some sizes in Grade 316L SS

Alternatives:

- Available in other materials to special order

Surface Finish :

- All surface finishes are to ASME BPE-SF-O (No finish required).
- If a specified finish on a particular surface is required, please state on the enquiry and order.

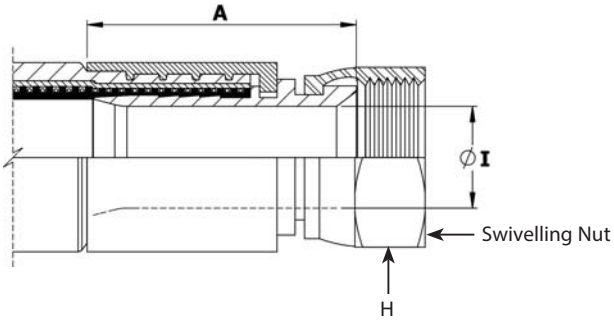

Nominal Hose Size		37° JIC Thread Size	*Fitting Length A (Bioflex Ultra RC)		Hex Size H		Fitting Inner Diameter I		Weight of Fitting	
in	mm	in	in	mm	in	mm	in	mm	Kg	Lbs
1/2	13	3/4 - 16	1.57	40	0.88	22.2	0.37	9.40	0.09	0.20
3/4	20	1 1/16 - 12	1.89	48	1.25	31.7	0.62	15.75	0.20	0.44
1	25	1 5/16 - 12	2.28	58	1.50	38.1	0.85	21.50	0.30	0.66
1 1/2	40	1 7/8 - 12	2.72	69	2.25	57.1	1.25	31.75	0.62	1.37
2	50	2 1/2 - 12	3.27	83	2.88	73.0	1.76	44.60	1.10	2.42

JIC to NPT Male Union (including a JIC Male to NPT Male Adaptor)

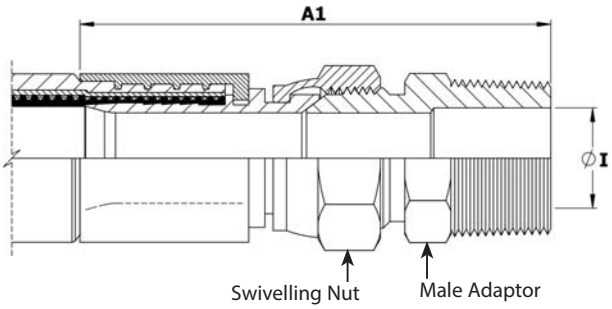

Nominal Hose Size		*Male Union Length A1 (Bioflex Ultra RC)		Weight of Fitting	
in	mm	in	mm	Kg	Lbs
½	13	2.95	75	0.17	0.37
3/4	20	3.74	95	0.34	0.75
1	25	4.49	114	0.64	1.40

JIC to NPT Female Union (including a JIC Male to NPT Female Adaptor)

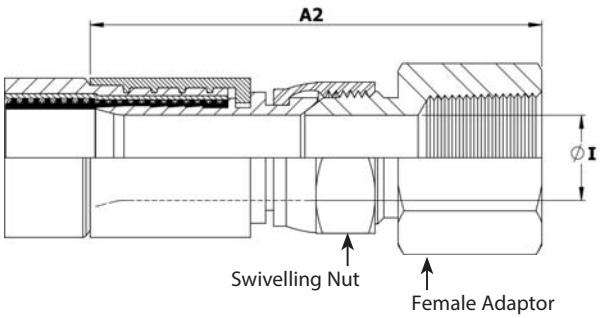

*Female Union Length A2 (Bioflex Ultra RC)		Fitting Inner Diameter I		Weight of Fitting	
in	mm	in	mm	Kg	Lbs
3.07	78	2.95	75	0.17	0.37
3.78	96	3.74	95	0.34	0.75
4.17	106	4.49	114	0.64	1.42

**Fitting Lengths listed are for Bioflex Ultra RC, SI and BK hose grades. Shorter lengths apply for other hose grades.*

Bioflex Ultra Dip Pipes, Straight or 90° Elbow

Fixed Dip Pipes

Description

Fixed Dip Pipes are fairly rigid, thick wall PTFE tubes, either straight or 90˚ elbowed, which are directly crimped to the end of Bioflex Ultra hoses. They are designed for insertion into drums, tanks and reaction vessels in order to suction drain (or inject) process fluids transferred through the hose.

Materials

- Standard dip pipes are in anti-static (AS) PTFE
- Ferrules, most in Grade 304 SS, some sizes in Grade 316L SS

How to order

Specify the size and material of the dip pipe, whether it is straight or 90˚ elbowed. Give the length of the straight leg of the dip pipe and the length of the rest of the hose assembly separately.

Maximum Working Pressures

Dip Pipes are normally only tested to 6 Bar Pressure, and are not suitable for use at pressures higher than 3 Bar. They are usable at negative pressure up to -0.9bar vacuum.

If higher pressure ratings are required, consult Aflex Hose.

Lengths

Dip Pipes are supplied as standard in 1 metre straight lengths, but can be supplied in any length to individual requirements.

Fixed Dip Pipe (90° Elbow)

Nominal Hose Bore Size		Approximate Dip Pipe Dimensions			
		Outside Diameter D		Inside Diameter I	
in	mm	in	mm	in	mm
3/4	20	0.87	22	0.51	13
1	25	1.14	29	0.83	21
1 1/2	40	1.54	39	1.00	27
2	50	2.17	55	1.58	40

Fixed Dip Pipe (Straight)

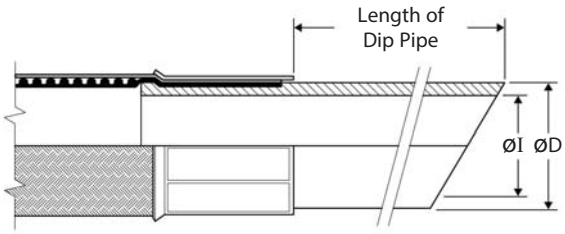

Detachable Dip Pipes

Description

As Fixed Dip Pipes above, but connected to the hose through an end fitting, not by crimping direct to the hose.

Design

A straight, or 90˚ elbowed anti-static PTFE Dip Pipe, fitted with a Flange or Cam & Groove Male PTFE Lined & Flared end fitting.

The most usual end fitting is a Cam Male (as shown), so the dip pipe can then be connected to a hose with a Cam Female end fitting.

Specifications

As above for Fixed Dip Pipes

Detachable Dip Pipe

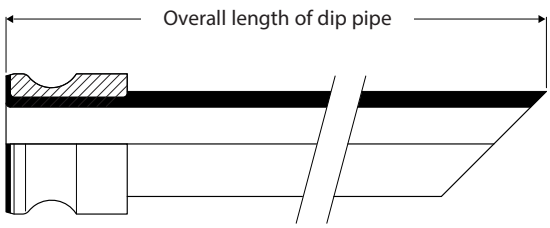

Bioflex Ultra 90° Elbow Fittings
PTFE Lined & Non-Lined

PTFE Lined 90° Elbow Fittings

All of the PTFE lined end fittings described on previous pages can be fitted as 90˚ elbow PTFE lined fittings to the design shown, to the sizes listed.

- All grades of hose can be used, except PB.

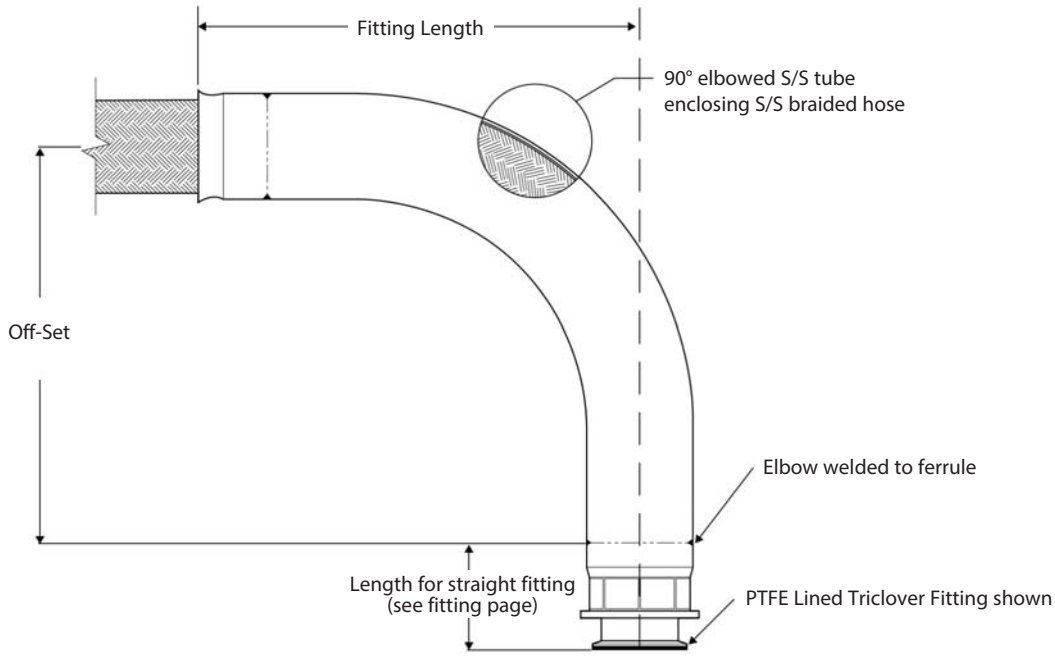

Hose Bore Sizes	Off-Set	Fitting Length	Weight of Fitting	
	mm	mm	Kg	Lbs
7/8" or 1"	85	143	0.485	1.07
1 3/8" or 1 1/2"	200	237	1.372	3.03
1 7/8" or 2"	200	314	1.678	3.70

Non-Lined 90° Elbow Fittings

A 90˚ elbow attached to the hose can be supplied non-PTFE lined, as shown, for any size or grade of hose or type of fittings, to special order.

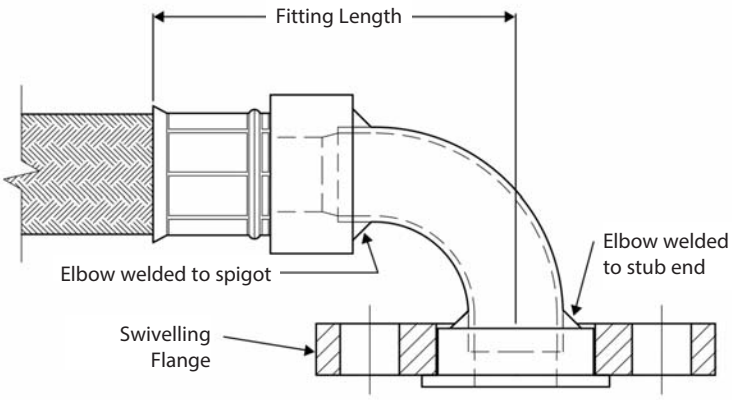

3-A Sanitary Fittings

3-A Sanitary standards require the hose end fitting to be sealed against the ingress of external fluid into the fitting construction. Aflex Hose have implemented a silicone seal between the ferrule and fitting to address this requirement. The direct crimp style fitting does not incorporate the silicone seal as standard and a modified version of the fitting for 3-A is required.

When ordering customers should specify that the hose assembly must meet 3-A sanitary requirements. The 3-A symbol and appropriate marking to 3-A requirements will be applied to the hose assembly.

Bioflex Ultra covered hoses are soakable in both standard and 3-A sanitary configurations. The 3-A assembly is only available with an EPDM or silicone cover.

The Aflex Hose 3-A certificate is available to view on our website in the 'certifications' section.

3-A Mini-Sanitary Triclamp Fitting

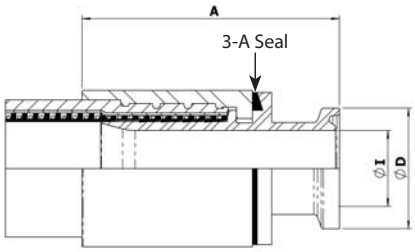

3-A Sanitary Triclamp Fitting

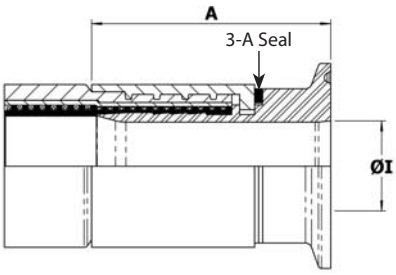

3-A DIN11851 Female

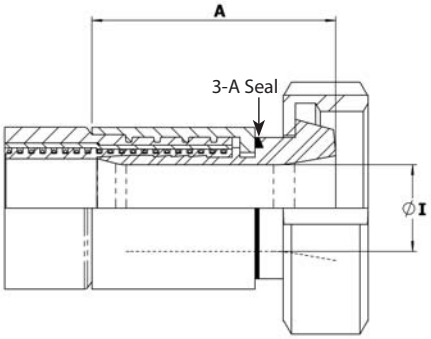

3-A Non Lined Swivel Flange

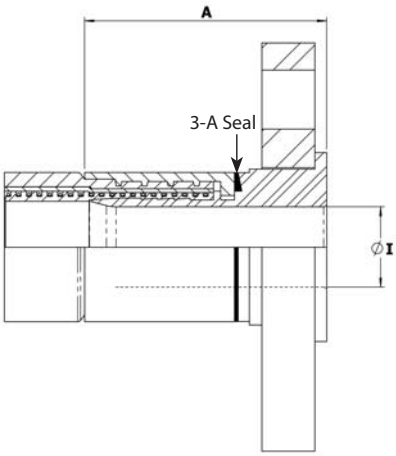

Specifications for the above fittings can be found on the relevant fitting pages.

Bioflex Ultra Insulated Hose Assemblies

Purpose

For use in Industrial, Chemical, Pharmaceutical and Biopharma applications where cold media passing through the hose can result in condensation forming on the outside of the hose, which may be undesirable within the application. The insulated hose can also be used with hot media to limit heat losses and to limit the external temperature of the hose for the protection of operators. Unlike other designs the insulation and cover is integral to the hose design and will stay in place throughout the hose life.

Description

The base hose comprises of a braided hose assembly. The insulated element comprises of a standard 12mm closed-cell fire resistant silicone foam rubber spirally wrapped around the hose, completed with a black EPDM rubber (matt finish) cover or a wipe clean Platinum Cured Silicone Cover (semi-transparent).

Design

Each hose is custom designed and built to suit the requirements of the particular application. Other applications can be considered please consult our technical department.

Specification

As for Bioflex Ultra GP, SS on pages 8 and 9, except that the minimum bend radius is increased by approx. 25%, there is an increase on the O/D of approx. 25mm and there will be a slight increase in the complete weight of the assembly. The media temperature range as per Bioflex Ultra with a stainless steel braid.

Limitations

Minimum Aflex Insulated hose assembly length 750mm.

Maximum Aflex Insulated hose assembly length 20mtrs ((Where maximum length for the hose size permits).

Not suitable for applications where exacting temperature control is required. See CH and ETH section for these applications.

Bioflex Ultra Steam Heated Hose Assemblies (CH Grade)

Purpose

For use in applications where the temperature of the process fluid must be maintained as it passes through the hose. This is usually required to prevent solidification or an increase in fluid viscosity. Steam heating is preferred to electrical heating in some applications for reasons of availability or safety, but is less controllable.

Description

The heating element comprises a small diameter PTFE heating hose, 1/4" or 3/8" bore size, with a single SS wire braid. This is spirally wrapped around the hose, with inlet and outlet ports attached, either both at one end or at opposite ends of the hose assembly. In the case of hose assemblies longer than 3 metres, it is usual to have several heating hoses with inlet ports at opposite ends and along the hose. This reduces the effects of temperature loss over the length of the Hose Assembly. The thermal insulation is usually closed-cell silicone foam rubber. The outer cover is a SS wire braid with a rubber cover if necessary.

Design

Each hose is custom designed and built to suit the requirements of the particular application. The following information is therefore required:

- Fluid in Hose Assembly
- Maintained Temperature of Fluid in Hose
- Temperature of Steam or Fluid in the Heating Hose
- Min/Max Ambient Temperature
- Pressure/Vacuum Applied to Fluid
- External Conditions of Abrasion etc

Specifications

As for Bioflex Ultra GP, SS on pages 8 and 9, except that the minimum bend radius is tripled, and the outside diameter and weight are significantly increased in line with the particular design.

Limitations

1" PTFE lined PN10 flange spigots on heated hoses can only have a maximum flare diameter of 50mm, not 63mm.
If the hose is "hanging", straight or at 90˚, under its own weight, special construction is required, so advise Aflex Hose accordingly.

Minimum CH Hose Assembly Length 750mm.

CH Hose Assembly

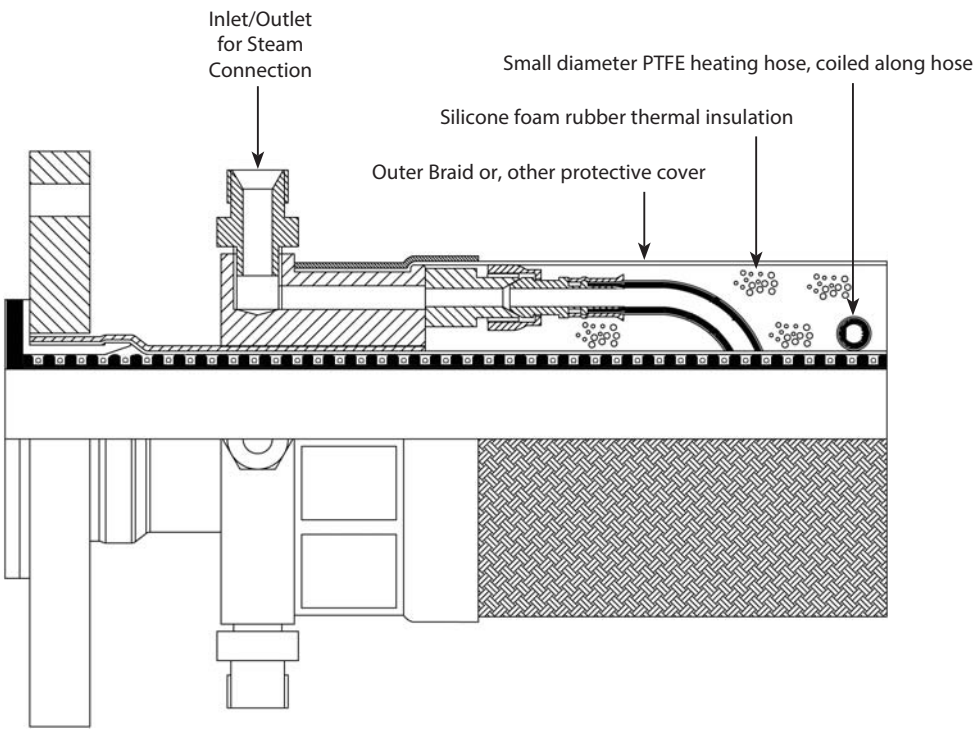

Bioflex Ultra Electrically Trace Heated Hose Assemblies (ETH Grade)

Purpose

For use in applications where the temperature of the process fluid must be regulated as it passes through the hose. In some applications, an additional 'melt out' facility may also be required.

Description

The heating element comprises either a resistance or self-regulating element spirally wrapped around the hose assembly. Self regulating elements may require a sensor and controller if a specific maintain temperature is required. Please consult Aflex Hose for clarification. Resistance element heated hoses usually also require a temperature sensor to be built in to the construction and must be used in conjunction with a temperature controller. The power leads and (if applicable) temperature sensor leads emerge from the hose assembly at one end, through glands and conduits. The thermal insulation is foam rubber, silicone foam rubber for temperatures above 80˚C (176˚F). The outer cover may be a polypropylene yarn or SS wire braid with a rubber cover if necessary.

Design

Each hose is custom designed and built. Application details must be supplied by filling in an "ETH Hose Questionnaire", available from Aflex Hose. Generally, for Hazardous Areas, particularly "ZONE 1", the Self Regulating type of heating element is employed, with or without a temperature sensor and control, and flameproof glands and conduit are also required. The watts per metre of the heating element, the pitch of the spiral on the hose, and the thickness of the thermal insulation are all calculated in accordance with established formulae to give the required maintained temperature.

Specifications

As for Bioflex Ultra GP, SS on pages 8 and 9, except that the Minimum Bend Radius is tripled and the outside diameter and weight are significantly increased in line with the particular design. Maximum ETH Hose Assembly Lengths are as Bioflex GP, SS.

Limitations

1" PTFE lined PN10 flange spigots on heated hoses can only have a maximum flare diameter of 50mm, not 63mm.
If the hose is "hanging", straight or at 90˚, under its own weight, special construction is required, so advise Aflex Hose accordingly.

Minimum ETH Hose Assembly Length, when collars are used 750mm.

ETH Hose Assembly

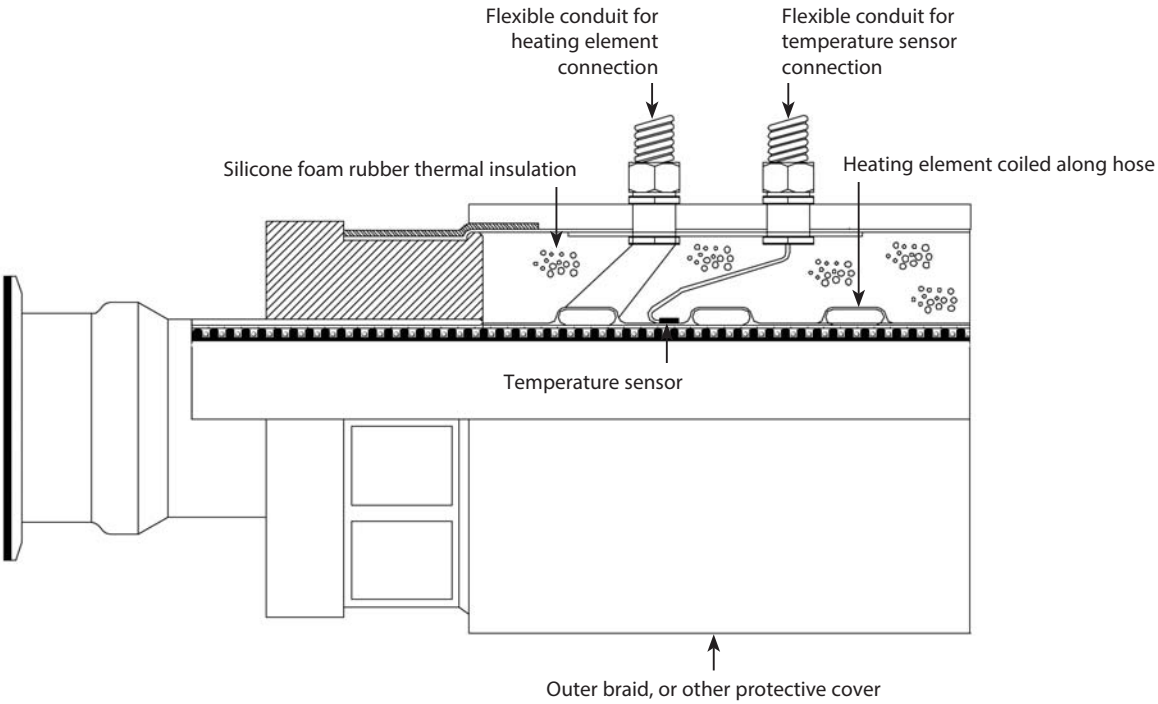

Bioflex Ultra Standard & Streamline Tagging and Colour Coding Systems

Standard Labelling

All Bioflex Ultra hose assemblies are labelled with the following information:

Manufacturer's Name (Aflex Hose Ltd)

Hose Size and Grade

EN16643 and year of standard publication

EN16643 electrical property grade

Max. Working Pressure and test pressure

Working temperature range*

Unique Serial Number

Month & Year of Manufacture

Aflex Hose Telephone Number

CE Mark (if applicable)

**Note any restrictions on working pressure resulting from elevated temperatures.*

This information is normally laser-etched on to the ferrule.

In some cases, at the discretion of Aflex Hose, the information may be etched on to a thin stainless steel plate which is clamped to the hose, or a loose stainless steel ring mounted on the hose. This may be necessary for example, if the customer requires additional information which may not fit on to the ferrule.

Customers may specify which labelling system they require, and may request additional information on the label.

Streamline Tagging

This system is only applicable to the Silicone (SI) rubber covered grades of Bioflex Ultra that have a stainless steel (SS) braid.

A label and/or Colour Code is placed around the silicone cover of the hose and then encapsulated by a transparent silicone that is formed into a thin streamlined cover.

Note: ½" size, Colour Code only, no text.

Colour Coding

This system is applicable to all grades of Bioflex Ultra hose.

A coloured PTFE spiral strip is wound on to the hose.

It can be left loose, or it can be encapsulated under a transparent, heat-shrunk polyolefin sleeve.

Hose Configuration Requirements

Hose Assemblies are usually connected at both ends in service. They may then either remain in a fixed, or static configuration or in a flexing, or dynamic configuration.

Whether static or dynamic, the First Rule concerning the configuration of the hose is that the bend radius of the hose must never be less than the Minimum Bend Radius (MBR) for the hose as listed in the relevant hose brochure.

The most common situation when this is likely to occur is when the hose is flexed at the end fitting, with stress being applied to the hose at an angle to the axis of the end fitting. Typically, this happens either because the length of the hose is too short, or because the weight of the hose plus contents creates a stress at an angle to the end fitting.

The Second Rule, therefore, if possible, is to design the configuration to ensure that any flexing in the hose takes place away from the end fittings.

(Dynamic) Configuration

INCORRECT - Hose too short

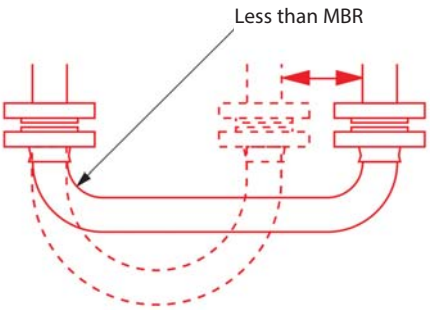

CORRECT - No flex at End Fittings

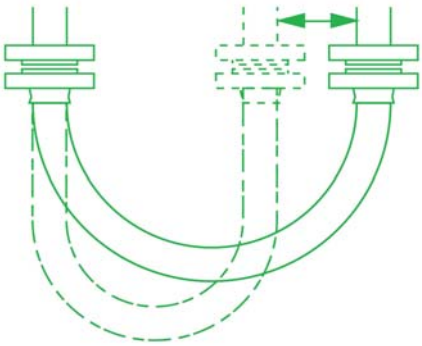

(Static) Configuration

INCORRECT - Weight of hose is at 90° to Axis of End Fittings

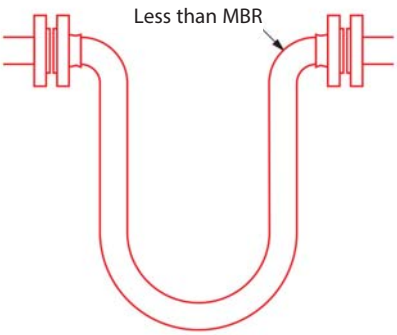

CORRECT - No flex at end fittings

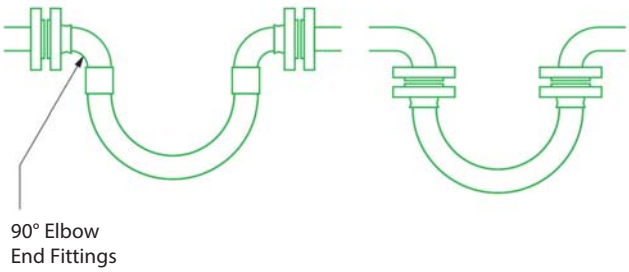

The Third Rule is that the hose configuration should always be designed, and supported where necessary, to avoid any possibility of external abrasion.

In some cases, the length, configuration and angle of the hose can be designed to avoid abrasion. In others, static or moving support frames or support wheels are required.

INCORRECT - Abrasion against hose

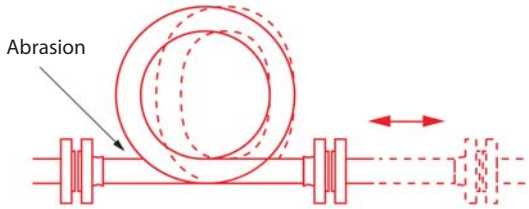

INCORRECT - Abrasion inside support

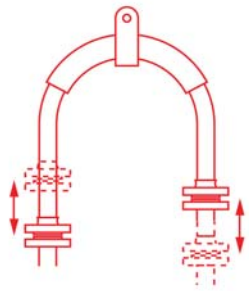

CORRECT - No hose abrasion

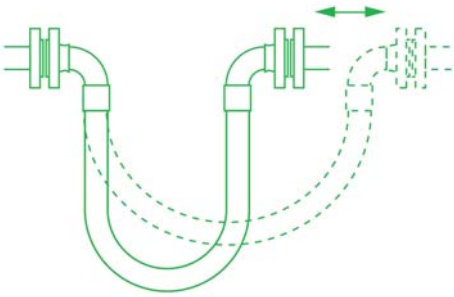

CORRECT - No abrasion over support

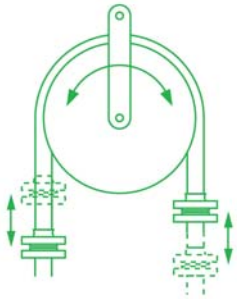

The Fourth Rule is that the hose must not be subjected to torque, either during connection, or as a result of the flexing cycle.

Torque (twist) in the hose can be applied during connection if the hose is accidentally twisted, or if the second end being connected is a screwed connection, and the hose is subjected to torque during final tightening.

In a flexing application, if any flexing cycle of the hose occurs in 3 dimensions instead of 2, then torque will also occur:

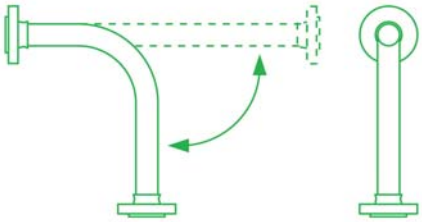

CORRECT - Flexing movement takes place in 2 dimensions

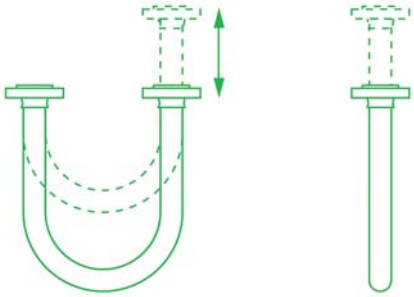

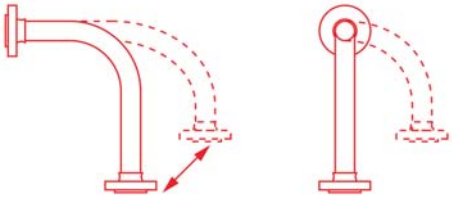

INCORRECT - Flexing movement takes place in 3 dimensions so torque is applied

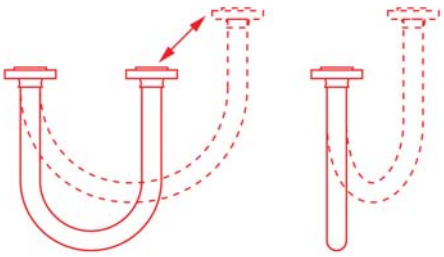

Calculating the Hose Length

The formula for calculating the bent section of the hose length around a radius is derived from the basic formula that the circumference of a circle = 2πR, where R = the radius of the circle, and π = a constant, = 3.142.

So, if the hose goes around a 90˚ bend, which is 1/4 of a full circumference, and the radius of the bend is R, then the length of the hose around the bend is = 1/4 x 2πR. Or half way round, in a U-shape, = $^1/_2$ x 2πR.

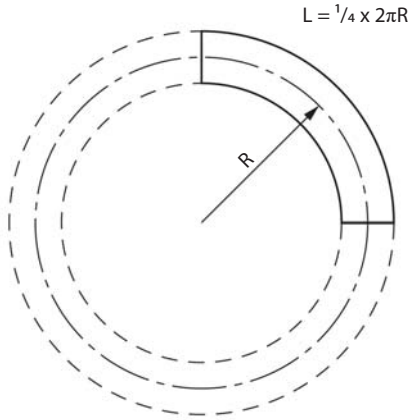

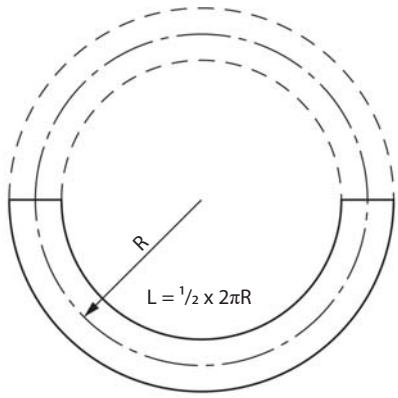

Note :

In calculating the length of a hose assembly, the (non-flexible) length of the end fittings must be added in, also the length of any straight sections of hose, as in the following example:

Example :

To calculate the length for a 2" bore size hose with flange end fittings, to be fitted in a 90˚ configuration with one leg 400mm long, the other 600mm long.

Length of Bent Section (yellow) = $^1/_4$ x 2πR (334)

= $^1/_4$ x 2 x 3.142 x 334 = 525mm

Length of top, Straight Section, including the top end fitting length

= 600 - 334 = 266mm

Length of bottom end fitting = 66mm

Total length of Hose Assembly = 525 + 266 + 66 = 857mm

Things to consider

(a) A hose will normally take the longest radius available to it to go around a corner, not the MBR! Also - always remember to include the non-flexible end fitting lengths.

(b) In dynamic applications, remember to always calculate the lengths for the most extended configuration during the flexing cycle, not the least extended.

(c) If the configuration is simply too complex for calculation, then obtain a length of flexible tubing of some kind, mark on paper, or a wall, or floor, or both where the connection points will be relative to each other, scaled down if necessary, then manually run the flexible tubing between them with full radii round bends. Measure the extended length, then scale up if necessary to determine the approximate length of the hose.

If in doubt, consult Aflex Hose.

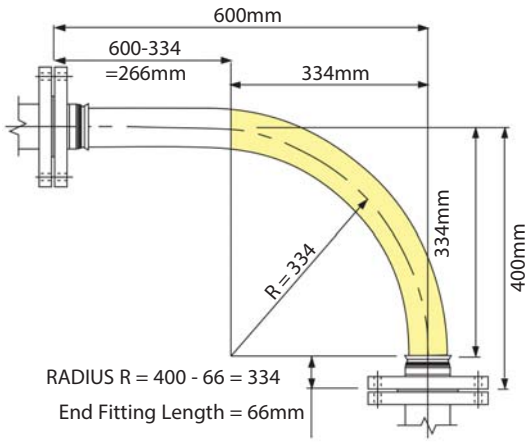

Conditions of Sale

DEFINITIONS

"**Business Days**" shall mean a day (other than Saturday or Sunday or public holiday) when the banks in London are open for business.

"**Conditions**" shall mean these terms and conditions for the sale of Goods or the supply of Services or both made by the Seller and the Customer.

"**Contract**" shall mean a binding contract for the sale of Goods and/or Services or both made by the Seller and the Customer.

"**Customer**" shall mean the individual or entity that is purchasing Goods and/or Services hereunder.

"**Factored Products**" shall mean products which are supplied by Seller, but are not manufactured by Seller, and are purchased by Seller from another supplier or manufacturer.

"**Full Product Brochure**" shall mean the brochure for each of Sellers specific Product available at **http://www.aflex-hose.com/products-and-markets/**.

"**Goods**" shall mean either the Products and/or the Factored Products.

"**Losses**" shall mean a) any direct and/or indirect, special or consequential loss or damage; b) loss of data or other equipment or property; or c) economic loss or damage; or d) incurring of liability for loss of damage of any nature whatsoever suffered by third parties (including in each case incidental and punitive damage); or e) any loss of actual; or anticipated profit, interest, revenue, anticipated savings or business damage to goodwill.

"**Products**" shall mean those products which are manufactured by Seller and are described on the Seller's website.

"**Seller**" shall mean Aflex Hose Limited.

"**Services**" means the services (if any) agreed to be supplied by the Seller to the Customer as detailed in the Order acknowledgment.

1. GENERAL

(a) These Conditions shall govern all Contracts between Seller and the Customer to the exclusion of all other terms and conditions including any terms or conditions which the Customer may purport to impose, apply or introduce under any document, communication, order or similar.

(b) A Customer shall place its order for the Goods or Services (or both) by completing the Seller's standard purchase order form (the "**Purchase Order**"). Each Purchase Order shall be deemed to be an offer by the Customer to buy the Goods or Services (or both) of the Seller that are identified in the Purchase Order subject to these Conditions exclusively. The Purchase Order shall only be deemed to be accepted when the Seller issues to the Customer an order acknowledgment form which indicates acceptance of the Customer's offer on these Conditions ("**Order Acknowledgment**"). A Contract between the Seller and the Customer shall come into existence at the time and on the date when the Seller delivers the relevant Goods and/or Services (or both) to the Customer.

(c) Delivery will be at Customers cost from Seller's facilities Brighouse, West Yorkshire, England.

(d) Title in the Goods shall remain at all times with Seller until full payment in clear funds has been received.

(e) Risk of loss or damage in the Goods shall pass to the Customer upon delivery to the Customer or third party carrier.

(f) Delivery dates specified by Seller are only Seller's best estimates and Seller's only responsibility will be to use reasonable commercial efforts to meet all specified delivery dates. Unless otherwise agreed in writing, time is not of the essence.

2. CUSTOMER RESPONSIBILITIES AND OBLIGATIONS

(a) It is the Customer's strict responsibility and sole liability to review all of the usage conditions and usage limitations given for the Seller's Products. The usage conditions and limitations are as referred to in these Conditions and are as further specified in the relevant Full Product Brochure. It will be the Customer's sole responsibility to consult with and to familiarise itself with the latest, up to date Product information and Full Product Brochure at the time of ordering, which are only available and downloadable from the Sellers website at **http://www.aflex-hose.com/products-and-markets/** or on request, in writing from Seller. The Customer hereby represents and warrants that it has read and understood the applicable Full Product Brochure and the usage conditions and the usage limitations set forth therein, and has ensured their compliance with the [intended end use] application conditions.

(b) If the Customer subsequently sells or assigns any Products to any other person or entity, the Customer shall ensure that the final end user of the Products is supplied with these Conditions of Sale, the applicable Full Product Brochures, the Seller website address, together with notification of the requirement to review the usage conditions and limitations. The Customer shall include the terms and conditions set forth herein in its Conditions of Sale to any third party. The Customer hereby agrees and acknowledges that Seller shall have no responsibility nor liability whatsoever for any claims arising in whole or in part out of the Customer selling or assigning the Products to a third party that does not use the Products in accordance with Sellers usage requirements and limitations ("**Non-Conforming Use Claims**"). The Customer shall indemnify and hold Seller, its officers, directors, employees, affiliates and representatives fully harmless from any and all claims in respect of any Losses whatsoever howsoever arising out of or related to or associated with Non-Conforming Use Claims.

(c) The Customer agrees and acknowledges that for any intended Product application in which special conditions apply which are not defined, or not defined sufficiently in the Product Brochure, the Customer shall write to Seller requesting written advice relating to any usage limitations resulting from special conditions. The Customer shall be fully liable and responsible for ensuring the design suitability and safety of the Products in their intended applications, giving particular consideration to any special condition relating to, but not restricted to the chemical and electrostatic compatibility of the fluids or gases passing through, the possibility of diffusion of fluid or gases through the PTFE hose lining, the possibility of external corrosive conditions, the types and likelihood of excessive mechanical abuse, such as abrasion (internal or external), crushing, excessive flexing or vibrations, etc. and any excessive temperature and/or pressure "pulsing" conditions, or any other condition which may cause premature hose failure. The Customer shall consider, and take account of the degree of risk involved in any potential Product failure, including the provision of adequate protection in the event of any risk to any persons. In applications where any type of Product failure would lead to financial losses if the Product is not replaced immediately, the Customer agrees and acknowledges that it shall be the Customer's responsibility to order and hold in stock spare Product(s) accordingly. The Customer shall advise Seller in writing at the time of placing the enquiry and on any Purchase Order if there are any special requirements for the Product, including special cleaning, or drying, or extra testing requirements which are in addition to normal industrial standards. Mere notice of such additional requirements to Seller however, does not relieve the Customer of its responsibility and liability for ensuring adequate measures are taken or are in place for such applications nor does the mere notification burden nor transfer to Seller any Customers' liability that the Customer has for such intended application.

3. FACTORED PRODUCTS

(a) The Customer accepts that Seller is not an expert in the technical features which apply to Factored Products and/or their use in application. Seller's only obligation will be to pass on to the Customer all the written information which they have regarding the Factored Product, but the Customer shall be responsible for ensuring that this and any other necessary Factored Product information is obtained and is reviewed and will decide solely if such data is sufficient to ensure that the Factored Product is fit for purpose in the intended usage application. If any application requirements apply which are not fully covered by the information which the Customer can obtain, then the Customer undertakes not to use or supply the Factored Product for use in that application. The Customer is also responsible for ensuring that the Factored Product will not be subjected to levels of usual or accidental physical abuse in service which would cause the Factored Product to fail. The Customer agrees and acknowledges that Seller, its officers, directors, employees, affiliates and representatives shall not be held liable for any claims or obligations arising out of the Customer's failure to fulfil any or all of its responsibilities set forth in this clause 3. a)., and hereby agrees to indemnify and hold Seller its officers, directors, employees, affiliates and representatives fully harmless from any and all claims that may arise in regard to Factored Products.

(b) If the Customer has any doubts concerning these or any other usage conditions and limitation or safety parameters, the Customer shall consult Seller at the number and address in the Notice Provisions below and request a written response to any queries.

4. HOSE SERVICE LIFE - WARRANTY

(a) The Product shall be as described in the Full Product Brochure. It shall comply with the specification materially in all respects. In respect of Factored Products please refer to its manufacturer's statement.

(b) It is not possible for Seller to warranty a minimum service life for any of its Products (for Factored Product's warranty provisions, please refer to manufacturer's standard policy) which can be applicable for every type of application. As such, Customer acknowledges that, except as provided below in Sections 4. c), 4. d) and 4. e)., Seller is not warranting a minimum service life of any of the Seller's Products. For avoidance of doubt Seller cannot and does not give any warranty in respect of the Factored Products, but will pass on to the Customer any (unexpired) warranty that is given by the manufacturer of the Factored Products.

(c) Save as provided for in 4. e)., below service life predictions or warranties of the Products, in respect of certain applications can only be given in cases where all the relevant information concerning the application is given in writing to Seller and Seller subsequently confirms in writing the service life prediction/warranty prior to the order being placed.

(d) If such a written undertaking is not sought and given, Seller shall not be held liable for any of its Product's (or Factored Product) failure which the Customer considers to be premature, except for defects which are due to faulty materials or manufacturing and which occur within 24 months or 12 months, as applicable, of supply as provided for under 4.e) below.

(e) Seller warrants its Products to be free from faulty materials or manufacturing defects from the date of delivery, for 24 months; provided, however, that

all Hose Assemblies which are "ETH" (Electrical Trace Heated) Grade or are Factored Products are only warranted for 12 months. The sole liability of Seller and the Customer's sole remedy for breach of warranty is as set out in clauses 5. a) and/or 5. b) below as applicable.

(f) SAVE AS PROVIDED FOR IN CLAUSE 4 c) (IF APPLICABLE) and/or 4 e) ABOVE, SELLER MAKES NO WARRANTY OF ANY KIND WHATSOEVER, EXPRESS OR IMPLIED OTHER THAN AS SPECIFICALLY STATED HEREIN, AND THERE ARE NO WARRANTIES OF MERCHANTABILITY AND/OR FITNESS FOR A PARTICULAR PURPOSE WHICH EXCEED THE OBLIGATIONS AND WARRANTIES SPECIFICALLY STATED HEREIN.

5. PRODUCT FAILURE

(a) In the event of a Product failure during the applicable warranty period set forth in Section 4 c) (if applicable) and/or 4. e), the Customer shall provide Seller with written notification within forty-eight (48) hours of discovering the fault. Seller requires that the relevant Product(s) not be cut up or tampered with, but should be decontaminated and returned to Seller, together with a decontamination certificate, for examination and analysis of the fault. The Customer should also provide full details in writing of the application conditions under which the hose failed, including Pressure, Vacuum, Temperature, Flexing and any cycling of any of these, also the fluids, gases and any cleaning products passed through the hose, and the total time that the hose has been in service also the original order number and the Serial Number for the hose. The Customer may send its own witness to the examination if required. Seller will provide a Non-Conformance Report to the Customer. The Customer shall bear the cost of returning the Seller Products that have failed; provided, however, as set forth in 5. b) or 5. c)., below, Seller shall reimburse the Customer for any shipping costs if it is determined that the failure is covered by the warranty set forth in Section 4. e).

(b) In the event of a Factored Product failure, the Customer shall advise Seller with written notification within 48 hours of discovering the fault. The failed Factored Product shall not be tampered with or de-constructed in any way, but shall be decontaminated as required to render it fully safe and free from harmful substances and held awaiting advice concerning its disposition from Seller. Full details concerning the application, the time in use in the application and a full description of the type of failure shall be supplied to Seller, who shall pass this information on to the supplier or manufacturer of the Factored Product for advice concerning the appropriate course of action. The Customer will then be advised accordingly.

(c) If Seller determines that faulty materials or a manufacturing defect in the Product (and/or Factored Product after consulting with the manufacturer) is responsible for the product failure, the maximum liability shall be the invoice value of the failed product itself, or the invoice value of the whole customer order as determined by Seller in its sole discretion, along with any reasonable costs for removal and replacement of the product, and costs for packing and dispatching the failed product back to Seller.

6. UNTESTED HOSE SUPPLIES FOR SELF-ASSEMBLY BY CUSTOMERS ("SAC")

(a) Seller does supply "loose" hose, without end fittings attached to a SAC, who will then cut the hose to length and attach end fittings to make up Hose Assemblies for their own use, or for sale to their own customers.

(b) Unless the SAC requests, and Seller confirms that the 'loose' hose is to be pressure tested before supply, such Hydrostatic testing of the hose and the end fitting attachment will not normally be offered by Seller. The SAC agrees and acknowledges that it will be solely responsible for carrying out such hydrostatic pressure testing of one hundred percent (100%) of such assemblies. The Maximum Working Pressure (MWP) of the hose assembly is specified in the relevant Full Product Brochure. The safety factor is also noted within the Full Product Brochure.

(c) When pressure testing braided hoses with a plastic or rubber outer cover, the cover will mask any signs of leakage for a time. The SAC agrees and acknowledges that after the hydrostatic pressure test, it is further required to test each covered hose assembly with an internal helium gas pressure of 30 Bar (450 psi) for hose sizes up to 1" and 15 Bar (225 psi) for hose sizes above 1", with the hose assembly immersed in water to enable leak detection by gas bubbles, for a minimum test period of 5 minutes.

(d) The SAC agrees and acknowledges that it alone shall determine and approve the Design Suitability of the hose assembly for its intended use before supply and that, except as set forth in 6. B), it shall indemnify and hold Seller fully harmless from any and all Claims and Losses, whether direct or indirect arising from Design Suitability for a SAC. This includes proceeding in accordance with 2. a) and 2. d) above.

(e) Seller's liability is limited to its Products which are assembled by approved SAC if all the hose and fitting components were supplied by Seller or approved for use by Seller in writing, and they were assembled and tested in accordance with Seller's current Manufacturing and Testing Instructions, available to approved SAC in an I-Bay on the Seller website.

7. UNTESTED HOSE ASSEMBLIES

Seller is sometimes requested by Customers to attach non-standard end fittings to hose assemblies which the Customer supplies, and in some cases it is not possible to connect these fittings to the Seller pressure test system. In such cases a "concession not to test" is obtained from the Customer, and a label is attached to the hose assembly, warning that it requires pressure testing before use. The Customer agrees and acknowledges that Seller shall have no liability whatsoever if the Customer does not comply with the warning that requires pressure testing before use, and agrees to fully indemnify and hold Seller fully harmless from any and all claims arising from this situation.

8. FORCE MAJEURE

Seller shall not be liable for any delay in delivery, failure to deliver or default in performing in accordance with any Customer's order if the delay or default is due to: (a) fires, floods, strikes, or other labour disputes, accidents to Seller's production facilities, acts of sabotage, riots, natural disasters, difficulties procuring materials, shortages of raw materials, interference by civil or military authorities, whether legal or de facto, governmental restrictions, including but not limited to failure to obtain export licenses, delays in transportation or lack of transportation facilities, restrictions imposed by federal, state or other governmental legislation or, rules or regulations thereof, including a force majeure event occurring in respect to one of Seller's suppliers; or (b) any other cause beyond Seller's control.

9. LIMITATIONS OF LIABILITY & EXCLUDED APPLICATIONS

(a) Seller's Products and/or Factored Products have not been designed nor tested for use in aerospace, medical implantation or radioactive fields ("**Excluded Applications**"), and as such their use is therefore strictly prohibited. Customer agrees and acknowledges that it is aware of the limitations set forth in this clause 9. a)., and hereby acknowledges and agrees that Seller shall have no liability whatsoever in the event Customer decides to unilaterally violate such prohibition by using Seller Products and/or Factored Products for such Excluded Applications. Customer hereby further agrees to indemnify Seller, its officers, directors, employees, affiliates and representatives for any and all Claims and Losses arising out of Customer's use of the Seller's Products and/or Factored Products in such Excluded Applications.

(b) Seller will not accept liability for any failures of the Seller Products and/or Factored Products which are caused by Customer's failure to perform and/or discharge their Responsibilities fully as specified in these Conditions.

(c) SAVE FOR: i) DEATH OR PERSONAL INJURY CAUSED BY AN ACT OR OMISSION TO ACT OF SELLER; OR ii) FOR AN ACT OF FRAUD/FRAUDULENT STATEMENT AND TO THE MAXIMUM EXTENT PERMITTED BY LAW AND NOTWITHSTANDING ANYTHING TO THE CONTRARY HEREIN, IN NO EVENT SHALL SELLER BE LIABLE FOR ANY SPECIAL, INDIRECT, INCIDENTAL, CONSEQUENTIAL, EXEMPLARY, OR PUNITIVE DAMAGES OR LOSSESS, LOSS OF PROFITS OR REVENUE, LOSS OF PROCESS PRODUCTS, DAMAGE TO EQUIPMENT, DOWNTIME COSTS, OR LOSS OF USE EVEN IF INFORMED OF THE POSSIBILITY OF SUCH DAMAGES. TO THE EXTENT PERMITTED BY APPLICABLE LAW, THESE EXCLUSIONS AND LIMITATIONS WILL APPLY REGARDLESS OF WHETHER LIABILITY ARISES FROM failure of the product(s), BREACH OF CONTRACT, FAILURE TO DELIVER ON TIME, WARRANTY, TORT (INCLUDING, BUT NOT LIMITED TO, NEGLIGENCE), BY OPERATION OF LAW, OR OTHERWISE.

10. COMPLETION OF BULK HOSE ORDERS

Due to the nature of the production of PTFE hose, Seller reserves the right to call an order complete in the following situations. If a product is a standard Seller product (as listed in Seller's product brochures) a figure of +10% of original order quantity can be supplied. If the product is a non-standard product and outside the Seller's standard product range the figure of +/- 10% of the original order quantity can be supplied. Goods supplied within these parameters would render the order complete.

11. NOTICE PROVISIONS

Any written notice required to be provided to Seller shall be sent to the following address: Seller Limited, Spring Bank Industrial Estate, Watson Mill Lane, Sowerby Bridge, Halifax, West Yorkshire, HX6 3BW.

12. EXCLUSION OF CONTRACTS FOR THE INTERNATIONAL SALE OF GOODS

The United Nations Convention on Contracts for the International Sale of Goods shall not apply to these Conditions of Sale and any and all other Customer documents.

13. GOVERNING LAW; JURISDICTION

(a) These Conditions of Sale and all rights, duties and obligations hereunder, including any and all other Customer agreements and orders shall be governed by and subject to English Law.

(b) The Customer acknowledges and agrees that any disputes arising out of or related in any way to this Agreement, including a breach of this Agreement, shall be brought exclusively in the courts of England, United Kingdom. Furthermore, Customer knowingly, voluntarily and irrevocably (a) consents to the exclusive jurisdiction of these courts, (b) waives any immunity or objection, including any objection to personal jurisdiction or the laying of venue or based on the grounds of forum non conveniens, which it may have from or to the bringing of the dispute in such jurisdiction, (c) waives any personal service of any summons, complaint or other process that may be made by any other means permitted by England, United Kingdom, (d) waives any right to trial by jury, (e) agrees that any such dispute will be decided by court trial without a jury, (f) understands that it is giving up valuable legal rights under this 13. B), including the right to trial by jury, and that it voluntarily and knowingly waives those rights.

UK BFXU/10.05.18 Rev 18

ISO 9001 Quality Management
ISO 14001 Environmental Management
IATF 16949 Automotive Quality Management
OHSAS 18001 Occupational Health and Safety Management

FM 643412 EMS 657211 TS 643414-000 OHS 674285

NAHAD MEMBER THE ASSOCIATION FOR HOSE AND ACCESSORIES DISTRIBUTION

BIOFLEX ULTRA
CORROFLON
CORROLINE+
PHARMALINE N&X
SMOOTHBORE
HYPERLINE FX
VISIFLON

UK
Spring Bank Industrial Estate
Watson Mill Lane
Sowerby Bridge
Halifax
West Yorkshire, HX6 3BW
Tel: +44 (0) 1422 317200
Fax: +44 (0) 1422 836000

USA
32 Appletree Lane
Pipersville
Bucks County
Pa 18947
Tel: 215 - 766 - 1455
Fax: 215 - 766 - 1688

WWW.AFLEX-HOSE.COM

AFLEX HOSE
The world's leading manufacturer of PTFE Flexible Hose